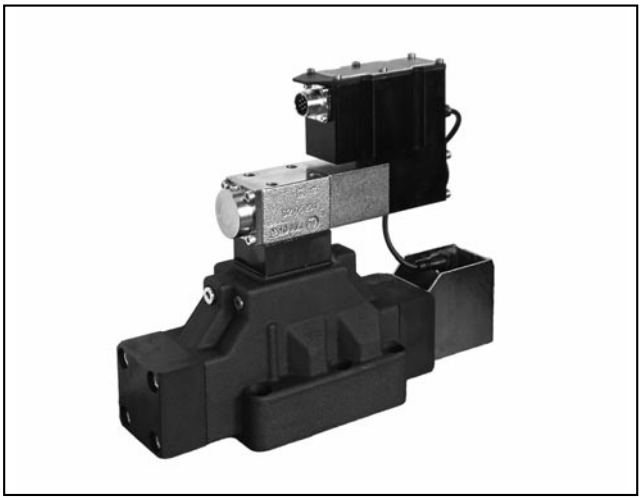

DXRE*J*

DIRECTIONAL CONTROL VALVES OPERATED BY HIGH RESPONSE VALVE, WITH OBE AND FEEDBACK

SUBPLATE MOUNTING

DXRE5RJ*	**ISO 4401-05**
DXRE7J*	**ISO 4401-07**
DXRE8J*	**ISO 4401-08**
DXRE9J*	**ISO 4401-08** oversize ports
DXRE10J*	**ISO 4401-10**
DXRE11J*	**ISO 4401-10** oversize ports

OPERATING PRINCIPLE

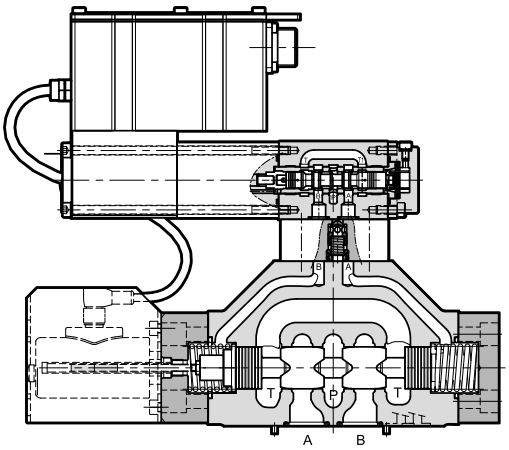

— DXRE*J* are directional control valves operated by a servo-proportional valve, with mounting surface compliant with ISO 4401 standards. The main spool position is controlled by a linear transducer LVDT in closed loop, which ensures high precision and repeatability.

— The valve is featured by integral electronic based on SMD technology which ensures standard regulations and simplifies the electric wiring. The valve doesn't require any adjustment other than the possible electronic set of the zero point.

— Two types of integrated electronics are available: for analogue signals or for fieldbus.

— These valves are suitable for applications in closed-loop position, speed and pressure control systems. Without power supply or enable input, the main spool is pushed and held in a fail-safe position by the centring springs.

HYDRAULIC SYMBOL (typical)

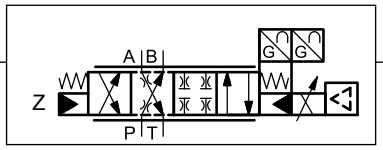

PERFORMANCES

(obtained with mineral oil with viscosity of 36 cSt at 50 °C and p = 140 bar)

		DXRE5RJ*	DXRE7J*	DXRE8J*	DXRE9J*	DXRE10J*	DXRE11J*
Max operating pressure: P - A - B ports T - X - Y ports	bar		350 250		300 250	350 250	320 250
Controlled flow with Δp 10 bar P-T	l/min	100	220	400	480	800	1000
Hysteresis	% Q_{max}	< 0.2%					
Repeatability	% Q_{max}	± 0.1%					
Electrical characteristics		see point 4					
Ambient temperature range	°C	-20 / +60					
Fluid temperature range	°C	-20 / +80					
Fluid viscosity range	cSt	10 ÷ 400					
Fluid contamination degree		According to ISO 4406:1999 class 18/16/13 (16/14/11 for longer life)					
Recommended viscosity	cSt	25					
Mass	kg	8.2	9.7	16	15.8	42.4	40.3

1 - IDENTIFICATION CODE

1.1 - Standard electronics

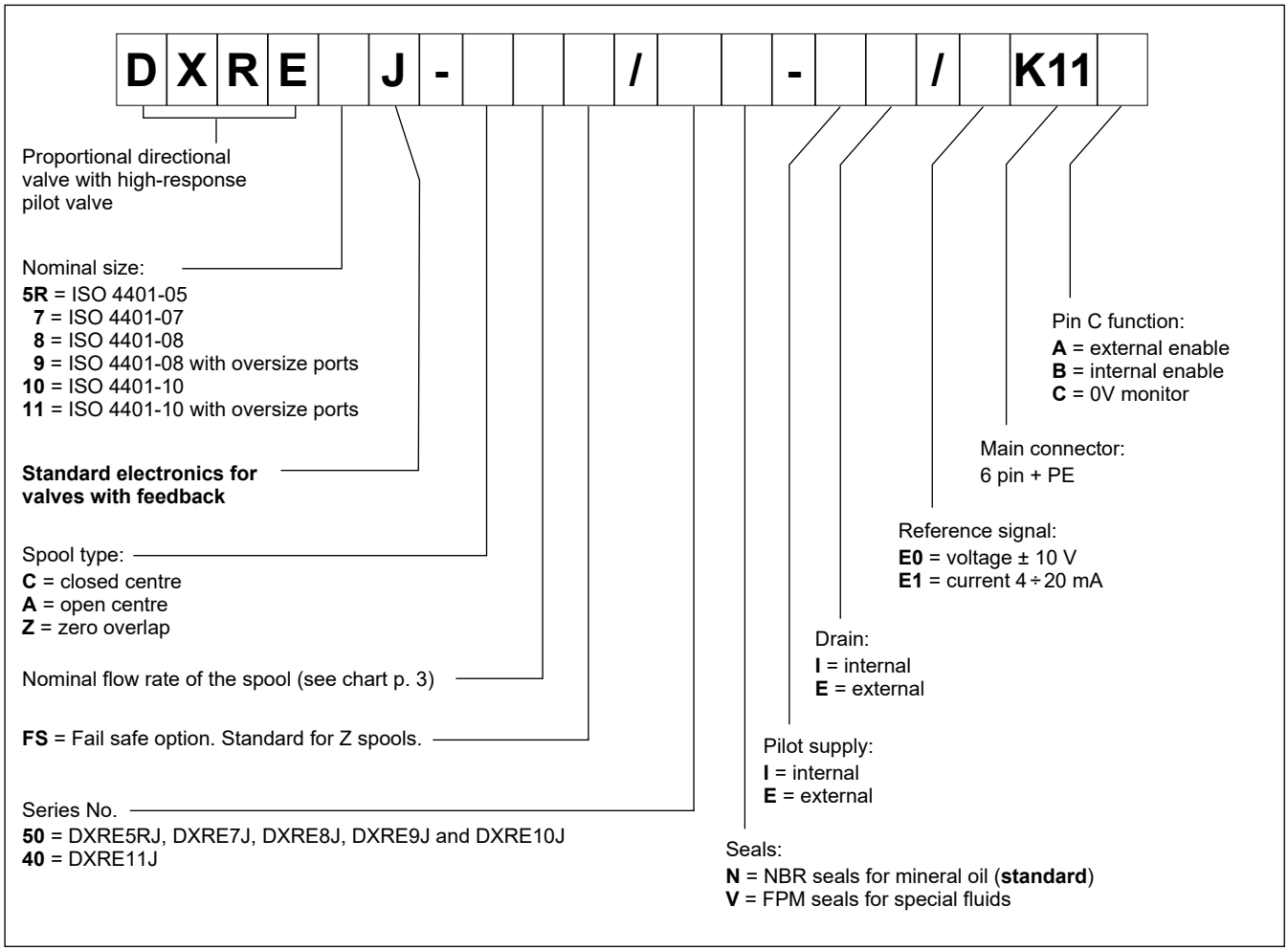

1.2 - Electronics with fieldbus communication

D X R E JH - / - - - K16 / 00

Proportional directional valve with high-response pilot valve

Nominal size:
5R = ISO 4401-05
7 = ISO 4401-07
8 = ISO 4401-08
9 = ISO 4401-08 with oversize ports
10 = ISO 4401-10
11 = ISO 4401-10 with oversize ports

Integrated electronics with fieldbus communication for valves with feedback

Spool type:
C = closed centre
A = open centre
Z = zero overlap

Nominal flow rate of the spool (see chart p. 3)

FS = Fail safe option. Standard for Z spools

Series No.
50 = DXRE5RJH, DXRE7JH, DXRE8JH, DXRE9JH and DXRE10JH
40 = DXRE11JH

Seals:
N = NBR seals for mineral oil (**standard**)
V = FPM seals for special fluids

Pilot supply:
I = internal
E = external

Drain:
I = internal
E = external

Reference signal:
E0 = voltage ±10 V
E1 = current 4 ÷ 20 mA
FD = full digital version (on request)

Main connection 11 pin + PE

X1 Main connection configuration:
D1 = one command
D0 = full digital version (on request - available for reference signal FD type only)

X2, X3 Fieldbus type:
EC = EtherCAT
EN = Ethernet /IP
PN = Profinet

2 - COMPARISON BETWEEN INTEGRATED ELECTRONICS

dimensions in mm

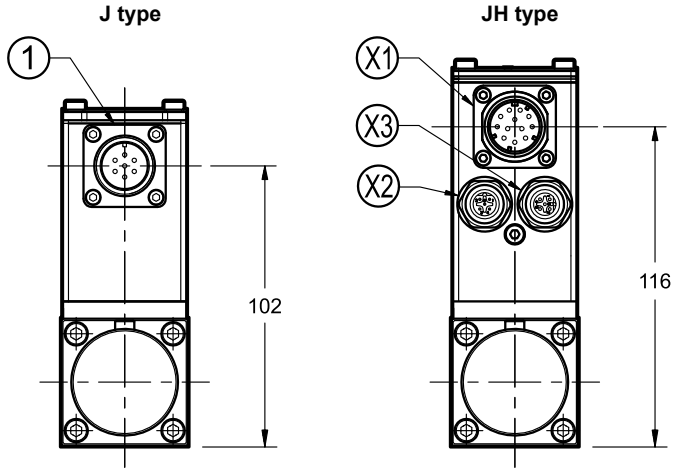

1	Connection 6 pin + PE
X1	Main connection 11 pin + PE
X2	Fieldbus communication (IN)
X3	Fieldbus communication (OUT)

NOTE 1: Please refer to sections 5, 6 and 7 for connections descriptions and pinouts.
NOTE 2: Related mating connectors have to be ordered separately. See catalogue 89 000.

3 - AVAILABLE CONFIGURATIONS

The valve configuration depends on the combination of spool type and rated flow.

3 positions with spring centering

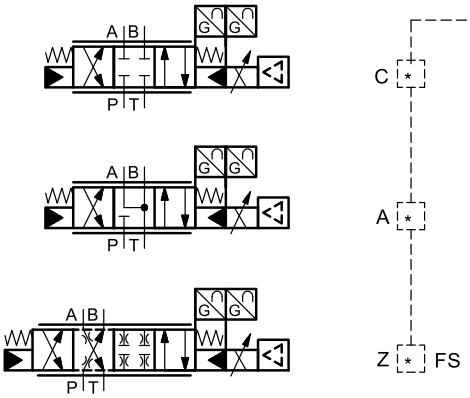

valve type	*	Controlled flow with Δp 10 bar P-T
DXRE5RJ	**100**	100 l/min
DXRE7J	**120**	120 l/min
	220	220 l/min
DXRE8J	**250**	250 l/min
	400	400 l/min
DXRE9J	**480**	480 l/min
DXRE10J	**800**	800 l/min
DXRE11J	**1000**	1000 l/min

detailed symbol (spool Z*FS)

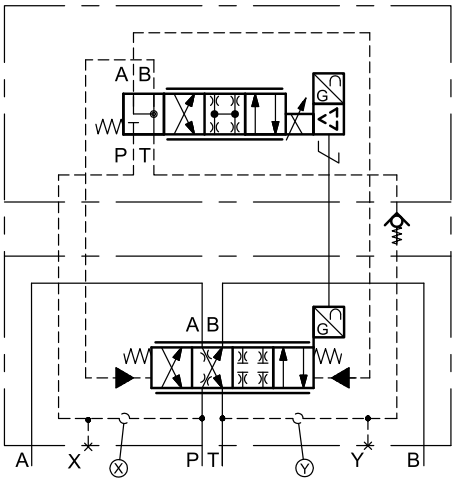

FAIL SAFE POSITION for Z*FS SPOOLS

When a power failure occurs, or when there is no enable input (K11A version), the main spool is moved to the offset position by the springs, with limited opening (1%...6% of the main spool stroke in P-B / A-T direction).

While the electrical supply voltage is being switched off, the actuator may be subject to a brief acceleration in the functional direction P–B / A–T.

detailed symbol (spool C)

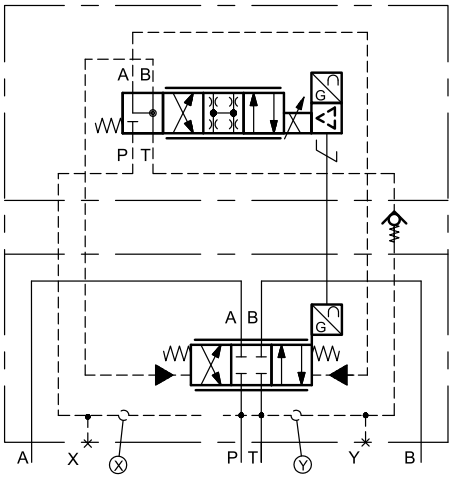

4 - ELECTRONICS COMMON DATA

Duty cycle		100% (continuous operation)
Protection class according to EN 60529 (**NOTE**)		IP65/IP67
Supply voltage	V DC	24 (from 19 to 30 VDC), ripple max 3 Vpp
Power consumption	VA	35
Maximum solenoid current	A	2.6
Fuse protection, external	A	(fast), max current 4A
Managed breakdowns		Overload and electronics overheating, LVDT sensor error, cable breakdown, supply voltage failures
Electromagnetic compatibility (EMC) emissions EN 61000-6-4, immunity EN 61000-6-2		According to 2014/30/EU standards

NOTE: The IP rating is guaranteed only with mating connector of equivalent IP degree, installed and tightened correctly. Moreover, on the JH versions it is necessary to protect any unused connections with caps.

5 - DXRE*J - STANDARD ELECTRONICS

5.1 - Electrical characteristics

Command signal: voltage (E0) current (E1)	V DC mA	±10 (Impedance Ri > 11 kohm) 4 ÷ 20 (Impedance Ri = 58 ohm)
Monitor signal (main spool position): voltage (E0) current (E1)	 V DC mA	 ±10 (Impedance Ro > 1 kohm) 4 ÷ 20 (Impedance Ro = 500 ohm)
Communication for diagnostic		LIN-bus Interface (by means of the optional kit)
Connection		6 pin + PE (MIL-C-5015-G - DIN EN 175201-804)

5.2 - On-board electronics diagrams

VERSION **A** - External Enable

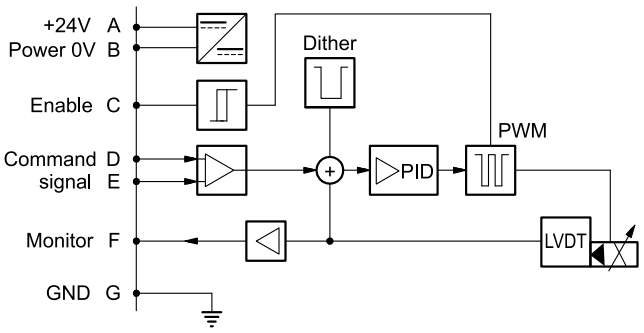

VERSION **B** - Internal Enable

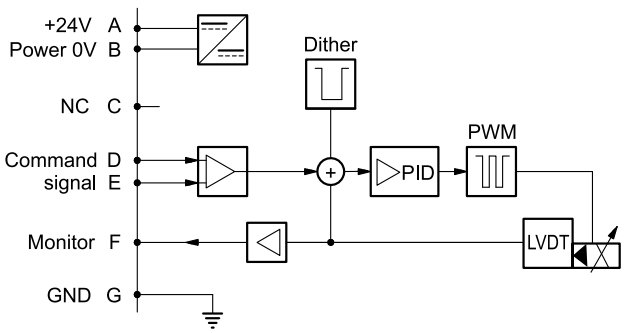

VERSION **C** - 0V Monitor

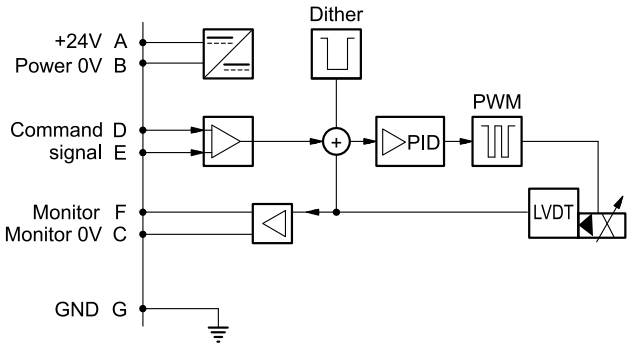

5.3 - Version with voltage command (E0)

The reference signal must be between -10V and +10V. The monitor feature of versions B and C becomes available with a delay of 0.5 sec from the power-on of the card.

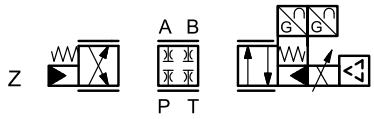

COMMAND	**-10V**	**0V**	**+10V**
MONITOR	**-10V**	**0V**	**+10V**

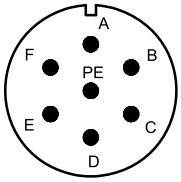

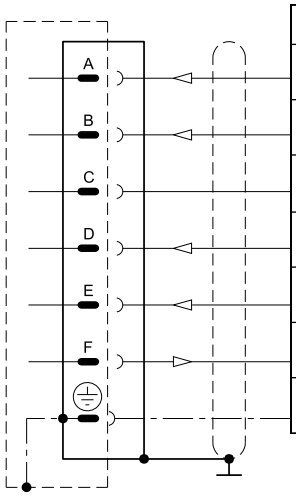

Pin	Values	version A	version B	version C
A	24 V DC	Supply Voltage		
B	0 V			
C		Enable 24 V DC	do not connect -	PIN F reference 0 V
D	± 10 V	Command (differential input)		
E	0 V	Command reference		
F	± 10 V	Monitor (0V reference: pin B)		Monitor
PE	GND	Ground (Earth)		

5.4 - Version with current command (E1)

The reference signal is supplied in current 4 ÷ 20 mA. If the current for command is lower than 4 mA the card shows a breakdown cable error. To reset the error is sufficient to restore the signal.

The monitor feature of versions B and C becomes available with a delay of 0.5 sec from the power-on of the card.

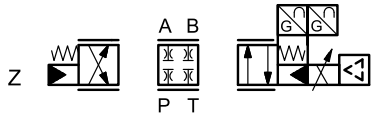

COMMAND	**4 mA**	**12 mA**	**20 mA**
MONITOR	**4 mA**	**12 mA**	**20 mA**

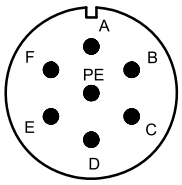

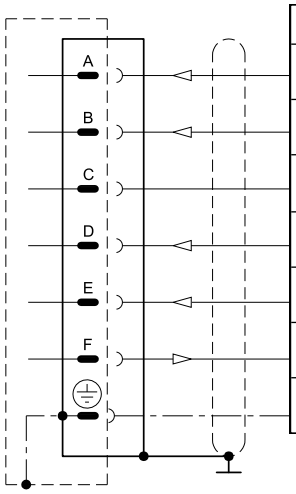

Pin	Values	version A	version B	version C
A	24 V DC	Supply Voltage		
B	0 V			
C		Enable 24 V DC	do not connect -	PIN F reference 0 V
D	4 ÷ 20 mA	Command		
E	0 V	Command reference		
F	4 ÷ 20 mA	Monitor (0V reference: pin B)		Monitor
PE	GND	Ground (Earth)		

6 - DXRE*JH - FIELDBUS ELECTRONICS

The 11+ PE pin connection allows separate supply voltage for electronics and solenoid.

Command - valve position schemes as for the standard electronics. Please refer to pictures in points 5.3 and 5.4.

6.1 - Electrical characteristics

Command signal: voltage (E0) current (E1) digital (FD)	 V DC mA	 ±10 (Impedance Ri > 11 kohm) 4 ÷ 20 (Impedance Ri = 58 ohm) via fieldbus
Monitor signal (main spool position): voltage (E0) current (E1)	 V DC mA	 ±10 (Impedance Ro > 1 kohm) 4 ÷ 20 (Impedance Ro = 500 ohm)
Communication / diagnostic		via Bus register
Communication interface standards		IEC 61158
Communication physical layer		fast ethernet, insulated 100 Base TX
Power connection		11 pin + PE (DIN 43651)

6.2 - X1 Main connection pin table

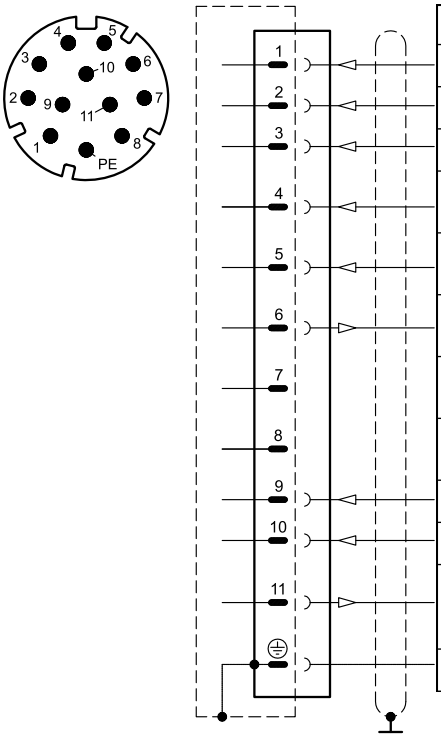

D1: one command

Pin	Values	Function
1	24 V DC	Main supply voltage
2	0 V	
3	24V DC	Enable
4	± 10 V (E0) 4 ÷ 20 (E1)	Command
5	0 V	Command reference signal
6	± 10 V (E0) 4 ÷ 20 (E1)	Monitor (0V reference pin 10)
7	NC	do not connect
8	NC	do not connect
9	24 V DC	Logic and control supply
10	0 V	
11	24 V DC	Fault (0V DC) or normal working (24V DC) (0V reference pin 2)
12	GND	Ground (Earth)

D0: full digital

Pin	Values	Function
1	24 V DC	Main supply voltage
2	0 V	
3	24V DC	Enable
4	NC	do not connect
5	NC	do not connect
6	NC	do not connect
7	NC	do not connect
8	NC	do not connect
9	24 V DC	Logic and control supply
10	0 V	
11	24 V DC	Fault (0V DC) or normal working (24V DC) (0V ref. pin 2)
12	GND	Ground (Earth)

6.3 - FIELDBUS connections

Please wire following guidelines provided by the related standards communication protocol. Any connections present and not used must be protected with special caps so as not to nullify the protection against atmospheric agents.

X2 (IN) connection M12 D 4 pin female

Pin	Values	Function
1	TX+	Transmitter
2	RX+	Receiver
3	TX-	Transmitter
4	RX-	Receiver
HOUSING	shield	

X3 (OUT) connection: M12 D 4 pin female

Pin	Values	Function
1	TX+	Transmitter
2	RX+	Receiver
3	TX-	Transmitter
4	RX-	Receiver
HOUSING	shield	

NOTE: Shield connection on connector housing is recommended.

7 - CHARACTERISTIC CURVES

(with mineral oil with viscosity of 36 cSt at 50 °C, DXRE*J-*****K11C valves)

Typical flow rate curves at constant Δp (**5 bar** per control edge), related to the reference signal.

DXRE*J, spools types C and A:

Valves with spools type C and A are configured to start opening to a given percentage of the reference signal. This percentage differs depending on the versions. It is 5% for DXRE*J...E*K11C and 10% for DXRE*J...E*K11A and DXRE*J...E*K11B.

See table below.

		opening values	
valve type		**E0** [±10 V]	**E1** [4 ÷ 20 mA]
DXRE*J...**E*K11C**	5% ref.	-0.5...0...+0.5	11.6 ...12...12.4
DXRE*J...**E*K11A**, ...**E*K11B**	10% ref	-1...0...+1	11.2...12...12.8

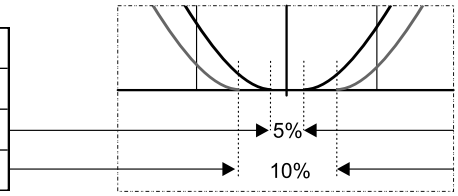

DXRE*JH, spools types C and A: the start opening percentage is 10%.

7.1 - DXRE5RJ* Characteristic curves

C100 / A100

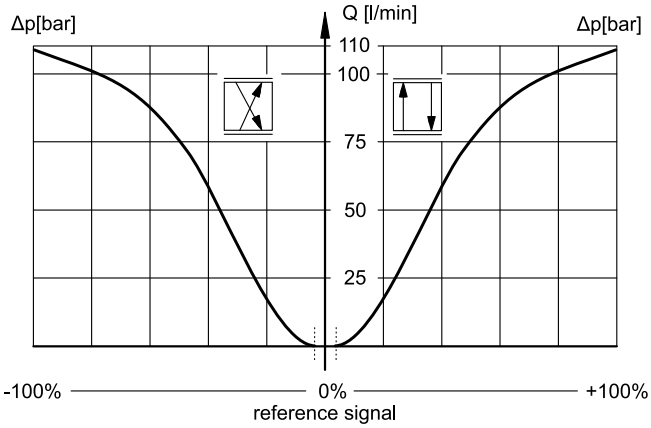

Z100FS

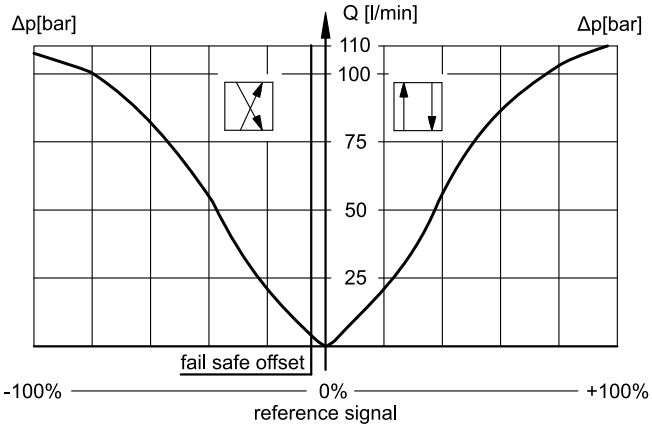

7.2 - DXRE7J* Characteristic curves

C120 / A120

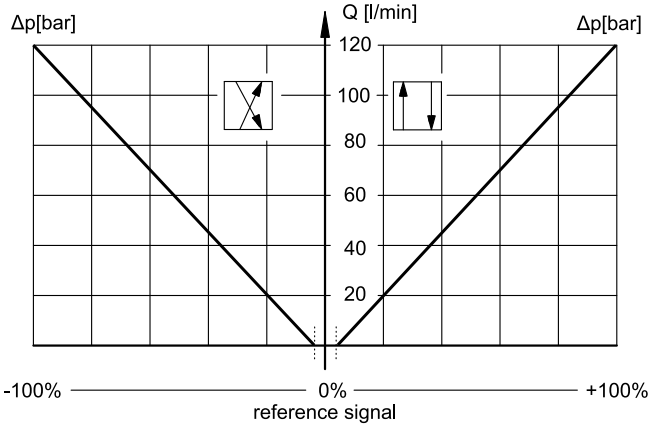

Z120FS

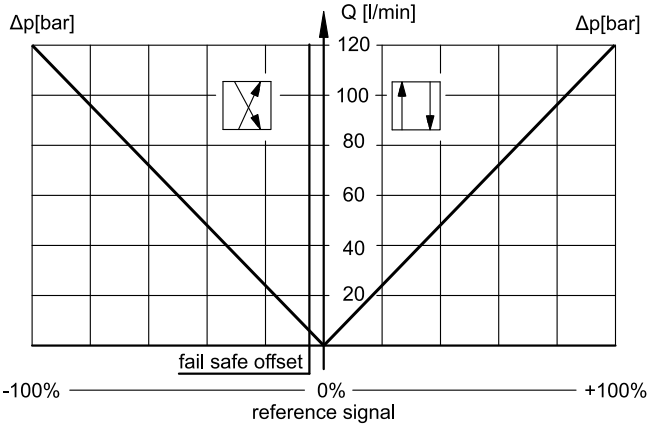

C220 / A220

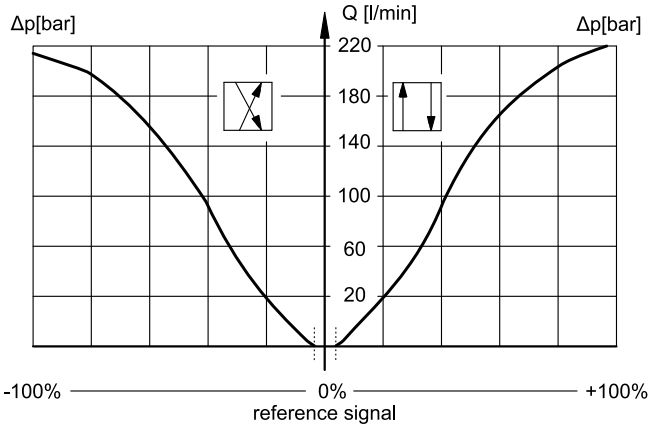

Z220FS

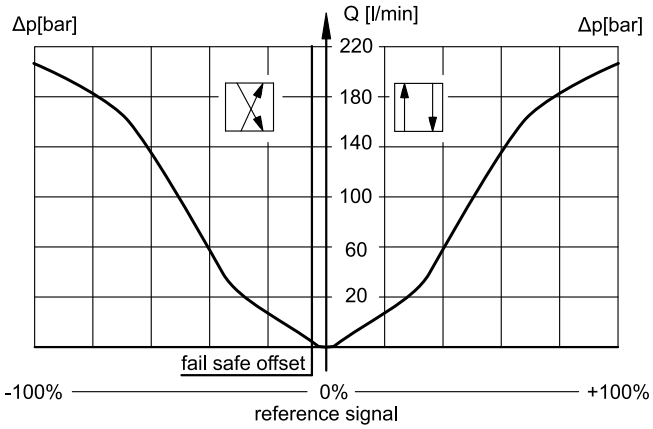

7.3 - DXRE8J* Characteristic curves

C250 / A250

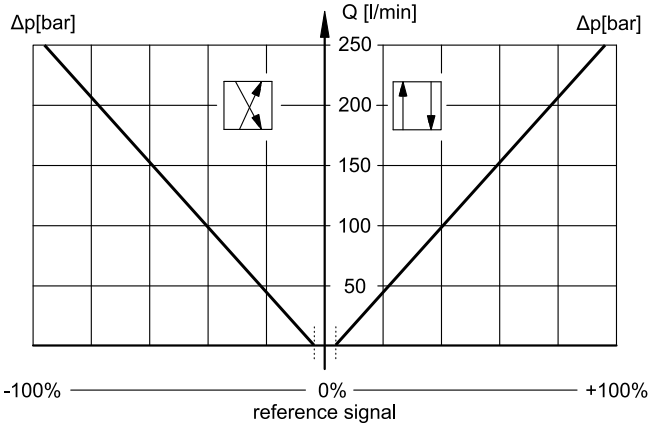

Z250FS

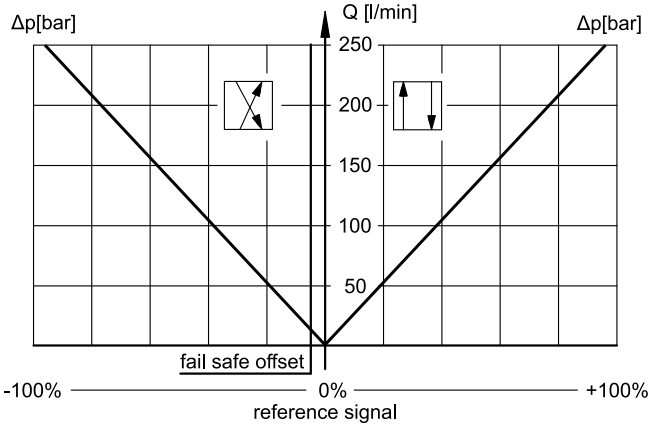

C400 / A400

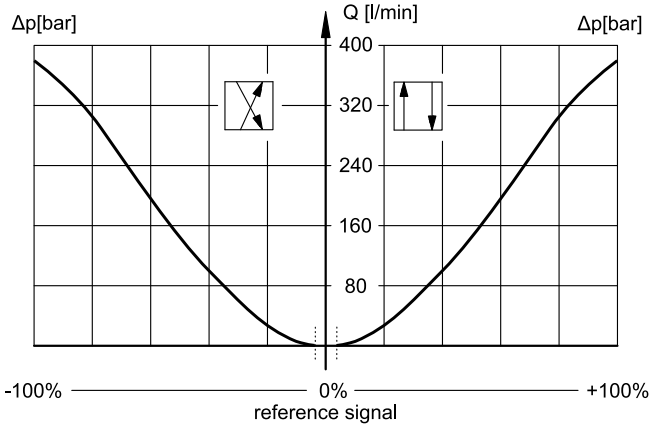

Z400FS

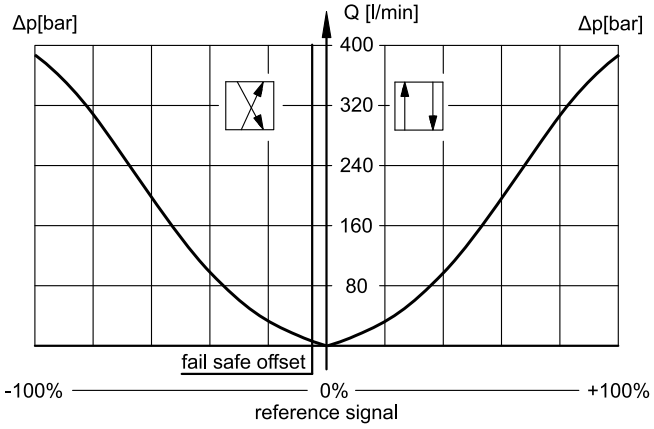

7.4 - DXRE9J* Characteristic curves

C480 / A480

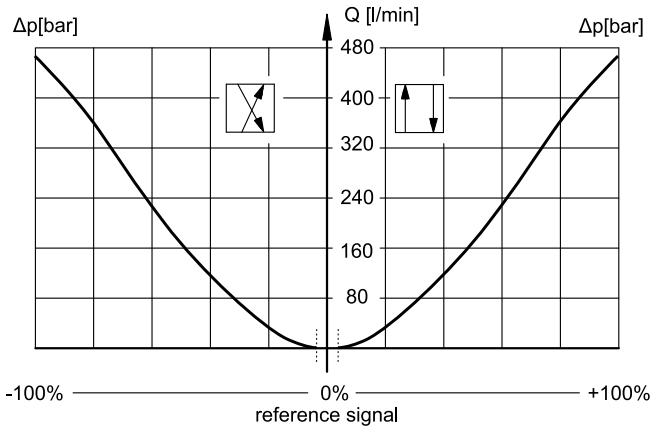

Z480FS

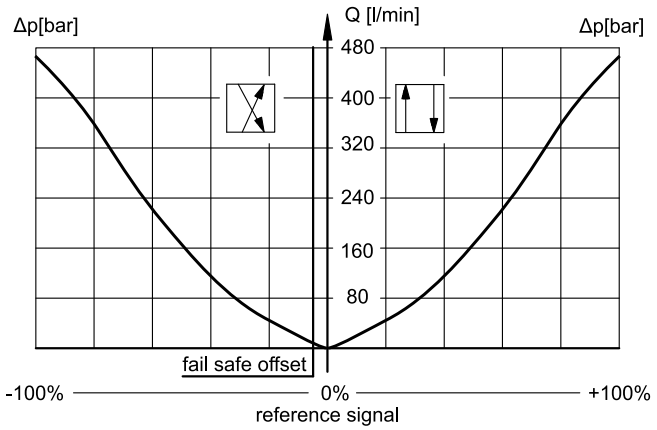

7.5 - DXRE10J* Characteristic curves

C800 / A800

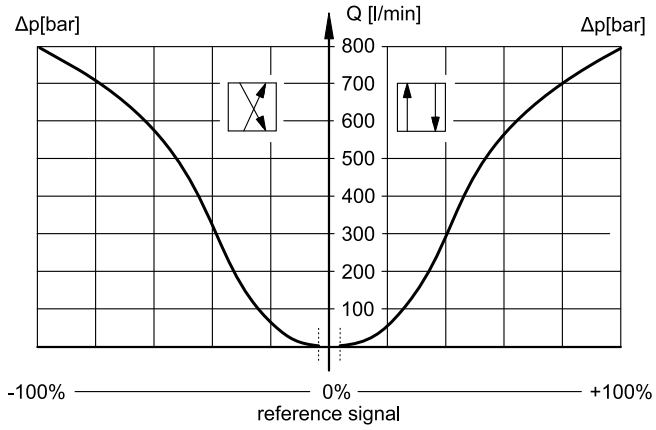

Z800FS

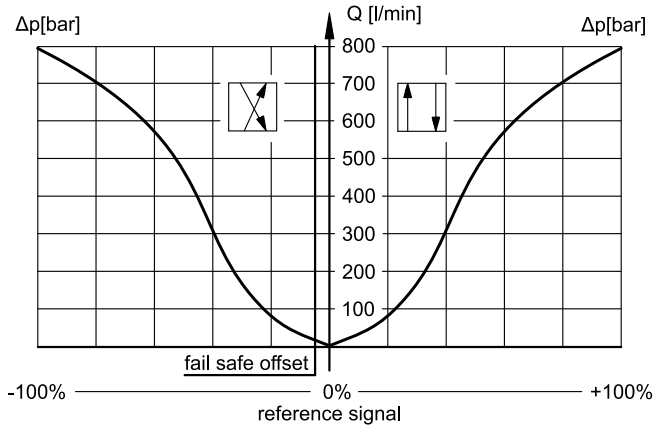

7.6 - DXRE11J* Characteristic curves

C1000 / A1000

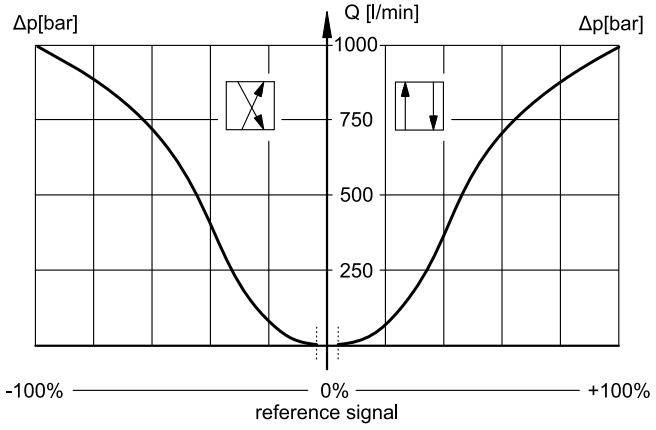

Z1000FS

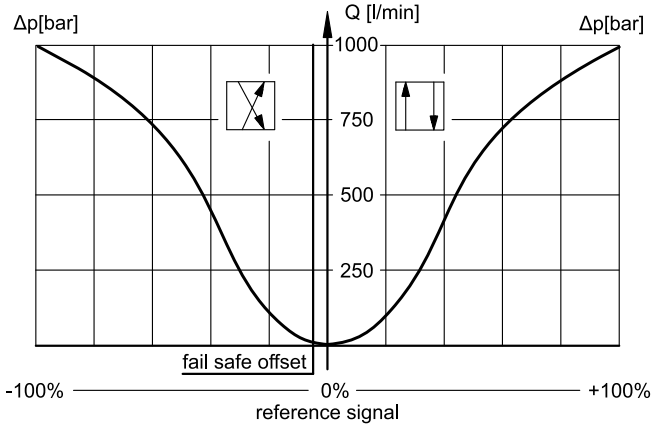

8 - RESPONSE TIMES

(obtained with mineral oil with viscosity of 36 cSt at 50 °C)

The tables shows the typical step response tested with static pressure 100 bar.

8.1 - DXRE5RJ*

RESPONSE TIME

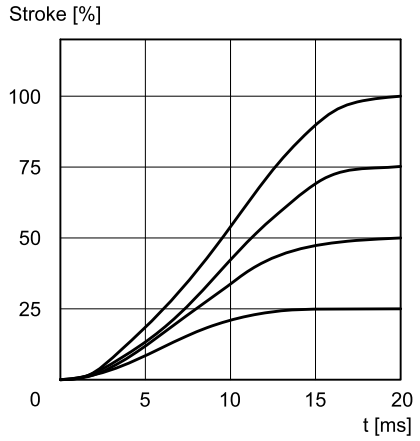

FREQUENCY RESPONSE (spools type Z*FS)

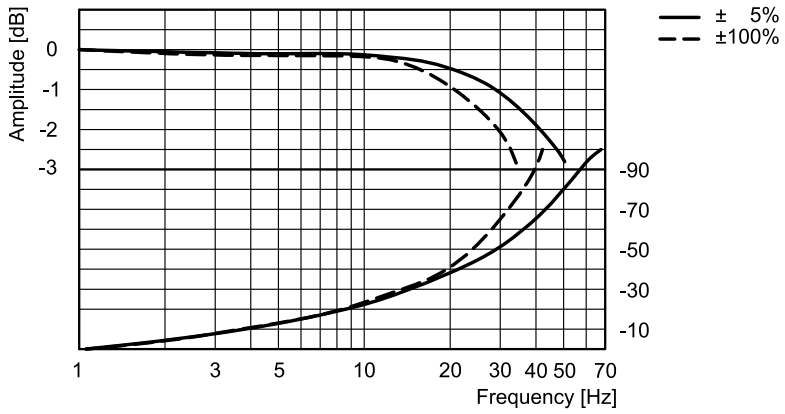

8.2 - DXRE7J*

RESPONSE TIME

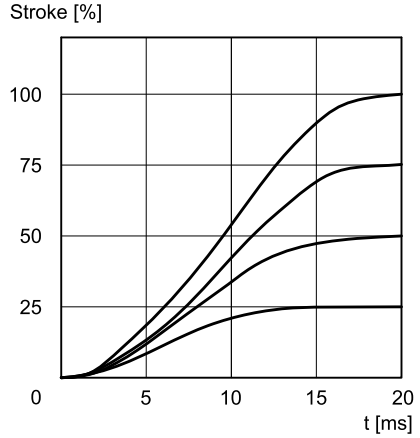

FREQUENCY RESPONSE (spools type Z*FS)

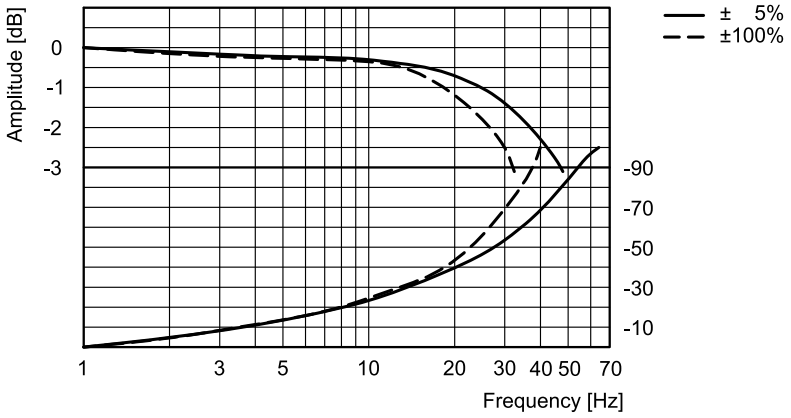

8.3 - DXRE8J* and DXRE9J*

RESPONSE TIME

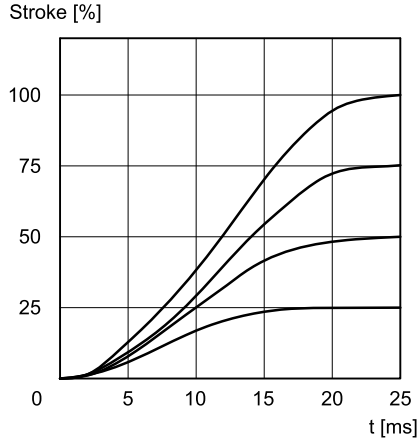

FREQUENCY RESPONSE (spools type Z*FS)

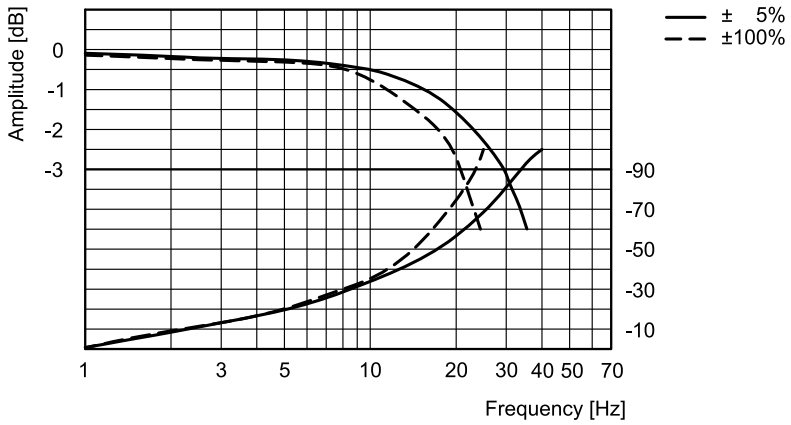

8.4 - DXRE10J* and DXRE11J*

RESPONSE TIME

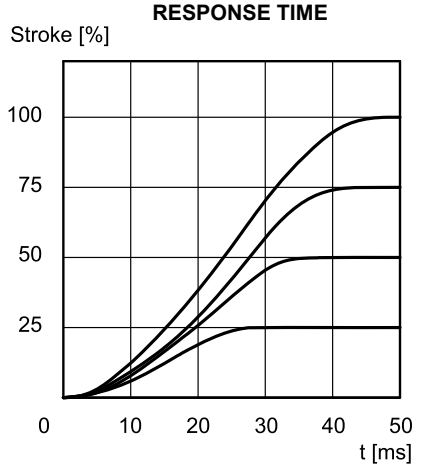

FREQUENCY RESPONSE (spools type Z)

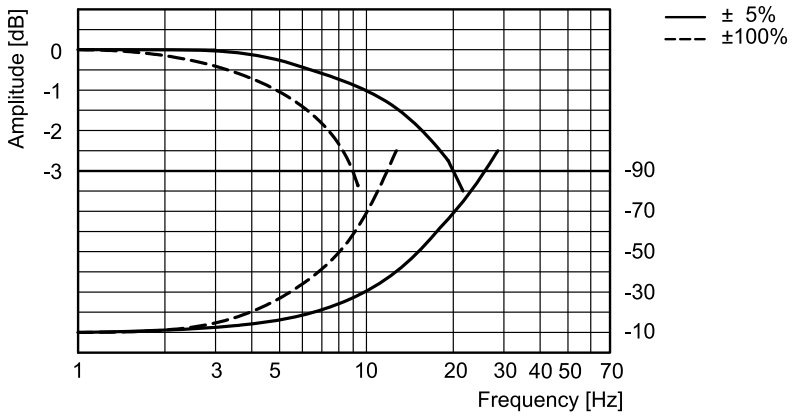

9 - HYDRAULIC CHARACTERISTICS

(with mineral oil with viscosity of 36 cSt at 50°C)

		DXRE5RJ*	DXRE7J*	DXRE8J*	DXRE9J*	DXRE10J*	DXRE11J*
Max flow rate	l/min	180	450	900	1000	1600	3500
Piloting flow required for operation 0 →100%	l/min	7	13	28	28	35	35
Piloting volume required for operation 0 →100%	cm^3	1.7	3.2	10	10	22	22

PRESSURES (bar)	MIN	MAX
Pilot supply pressure on X port	15	250
Pressure on T port with internal drain	-	30
Pressure on T port with external drain	-	250

9.1 - Pilot and drain

The DXRE*J* valves are available with pilot and drain both internal and external.

The version with external drain allows a higher back pressure on the discharge line.

NOTE: The configuration of pilots and drains must be chosen when ordering. Subsequent modifications are allowed only to specialized operators with authorization and in factory.

TYPE OF VALVE		Plug assembly	
		X	Y
IE	internal pilot and external drain	NO	YES
II	internal pilot and internal drain	NO	NO
EE	external pilot and external drain	YES	YES
EI	external pilot and internal drain	YES	NO

DXRE5RJ* **DXRE7J*** **DXRE8J* / DXRE9J*** **DXRE10J* / DXRE11J***

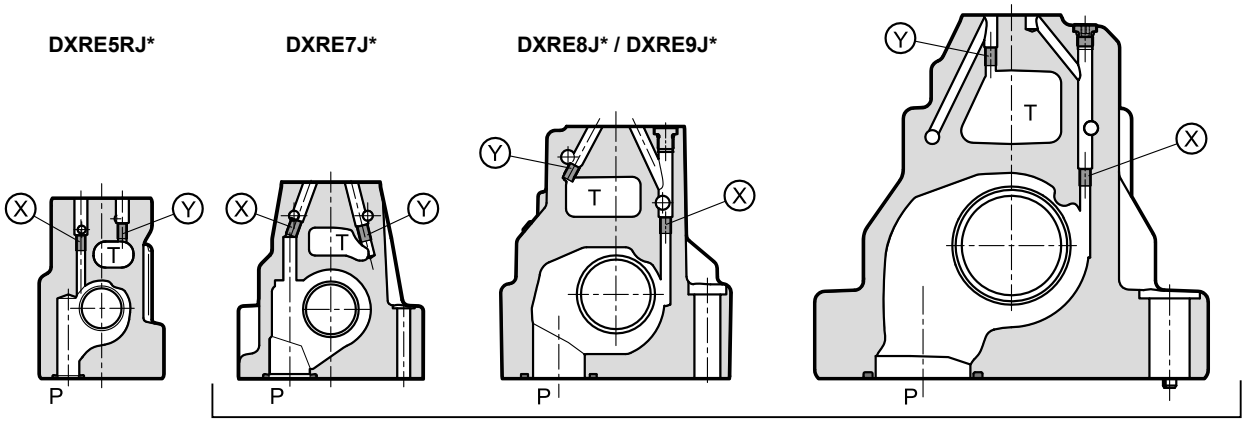

X: plug M5x6 for external pilot
Y: plug M5x6 for external drain

X: plug M6x8 for external pilot
Y: plug M6x8 for external drain

10 - DXRE5RJ* - OVERALL AND MOUNTING DIMENSIONS

dimensions in mm

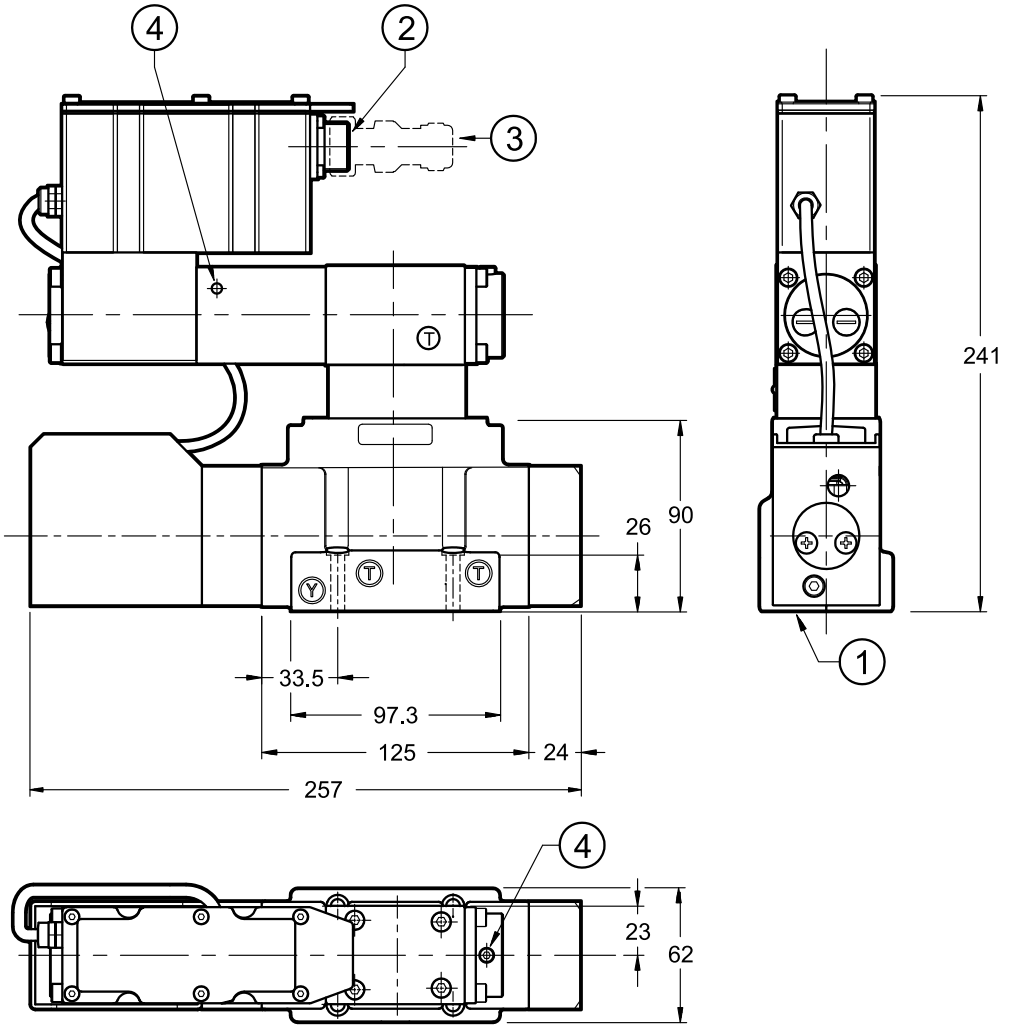

NOTES:
- See point 14 for the mounting surface.
- Do not dismantle the transducer.
- The valve is filled with mineral oil during testing. The breathers on the pilot stage must not be opened without specific authorization.
  Breaking the seals may cause the loss of the guarantee.

DXRE5RJH

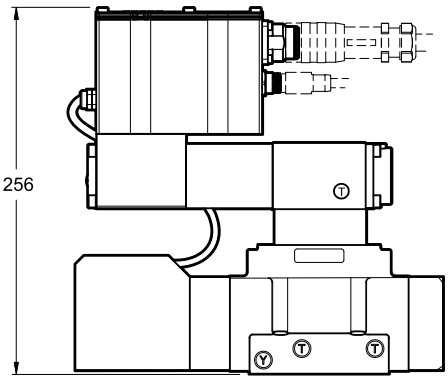

1	Mounting surface with sealing rings: 5 OR type 2050 (12.42x1.78) - 90 Shore 1 OR type 2037 (9.25x1.78) - 90 Shore
2	Main connection
3	Electrical connector (**to be ordered separately**). See point 17
4	Air breather. Sealed at the factory (**NOTE**)

Valve fastening: 4 SHC screws ISO 4762 M6x35
Tightening torque: 8 Nm (A8.8 screws)
Threads of mounting holes: M6x10

11 - DXRE7J* - OVERALL AND MOUNTING DIMENSIONS

dimensions in mm

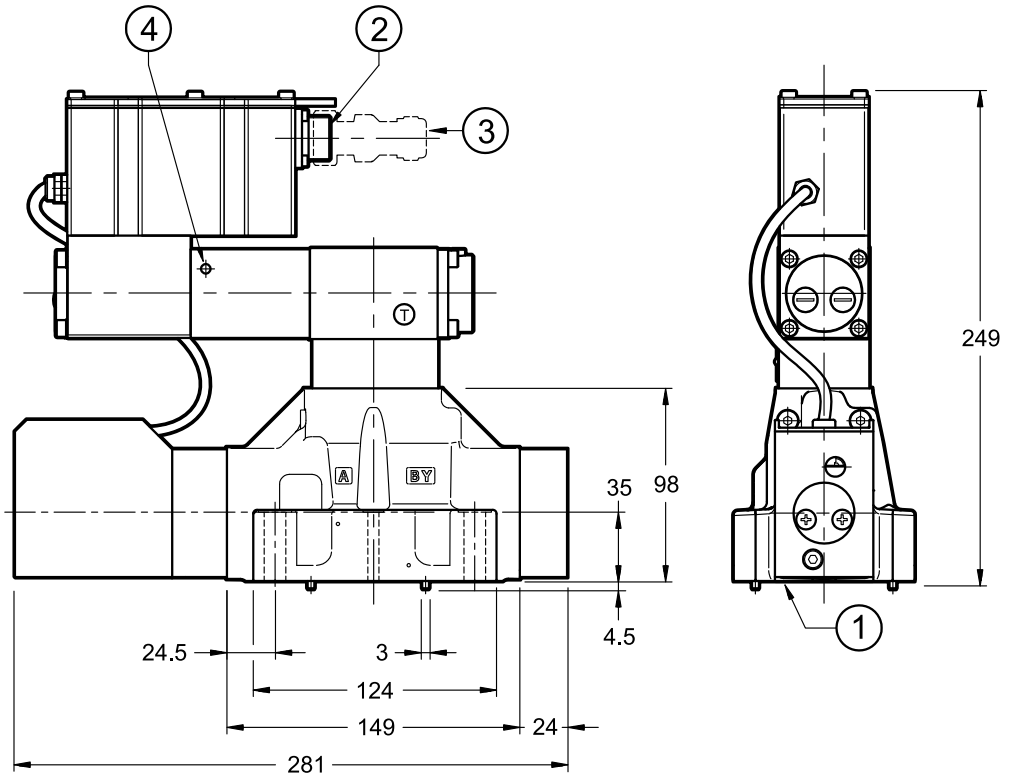

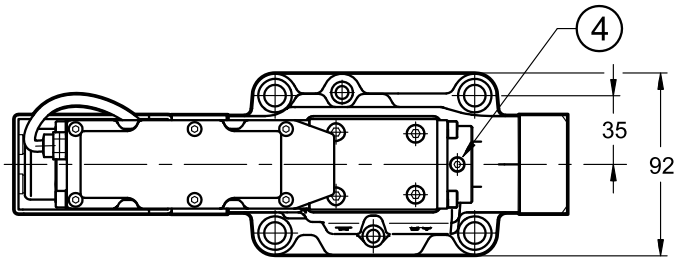

NOTES:
- See point 14 for the mounting surface.
- Do not dismantle the transducer.
- The valve is filled with mineral oil during testing. The breathers on the pilot stage must not be opened without specific authorization.
  Breaking the seals may cause the loss of the guarantee.

DXRE7JH

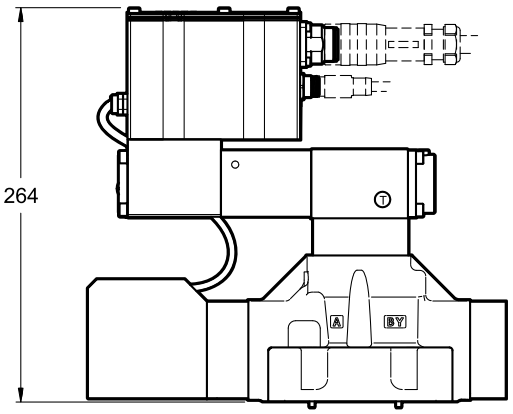

1	Mounting surface with sealing rings: 4 OR type 130 (22.22x2.62) - 90 Shore 2 OR type 2043 (10.82x1.78) - 90 Shore
2	Main connection
3	Electrical connector (**to be ordered separately**). See point 17
4	Air breather. Sealed at the factory (**NOTE**)

Valve fastening:	4 SHC screws ISO 4762 M10x50 2 SHC screws ISO 4762 M6x50
Tightening torque	M10x50: 40 Nm (A8.8 screws) M6x50: 8 Nm (A8.8 screws)
Threads of mounting holes: M6x18; M10x18	

12 - DXRE8J* / DXRE9J* - OVERALL AND MOUNTING DIMENSIONS

dimensions in mm

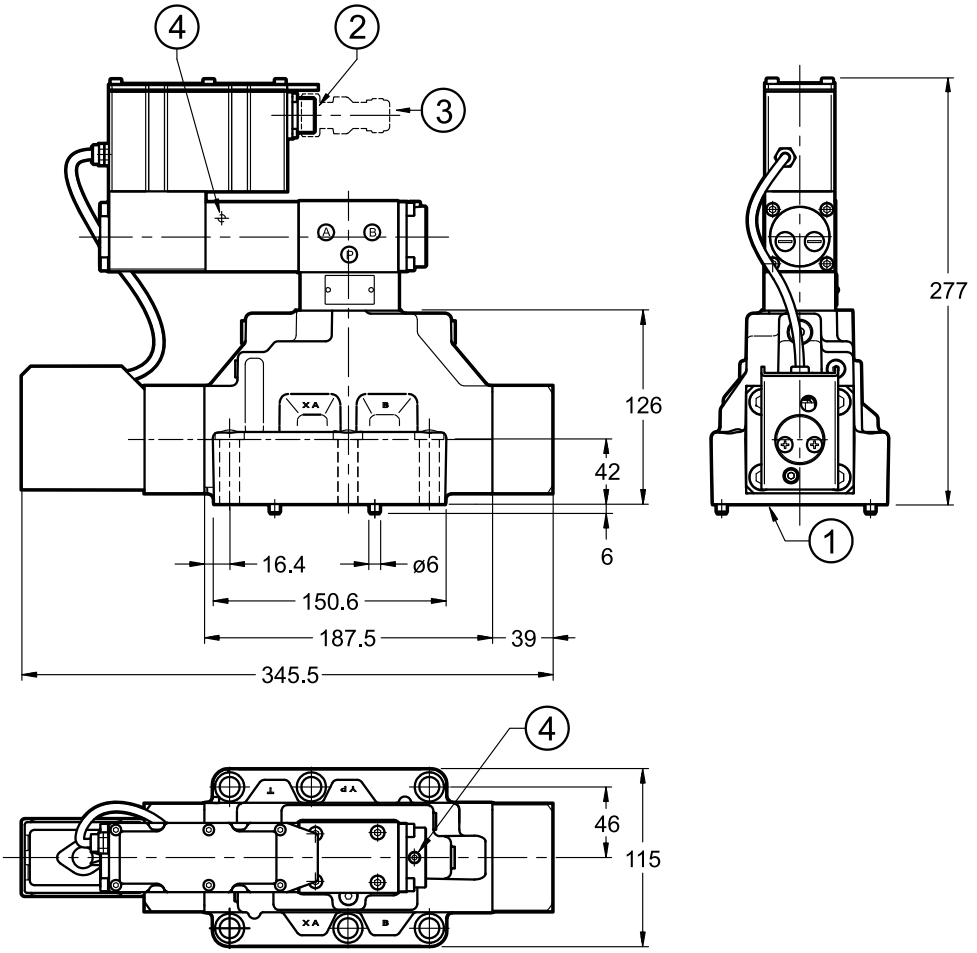

NOTES:
- See point 14 for the mounting surface.
- Do not dismantle the transducer.
- The valve is filled with mineral oil during testing. The breathers on the pilot stage must not be opened without specific authorization.
  Breaking the seals may cause the loss of the guarantee.

DXRE8JH / DXRE9JH

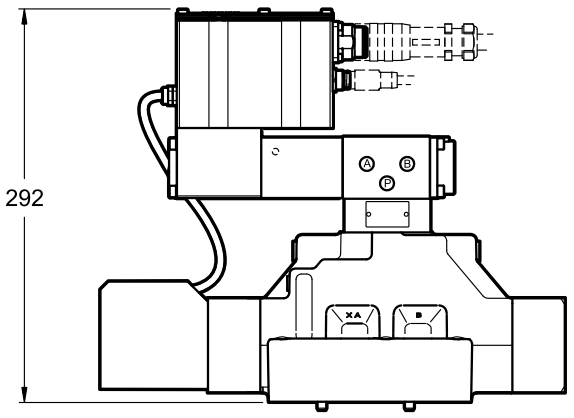

1	Mounting surface with sealing rings: **DXRE8J*** 4 OR type 3131 (32.99x2.62) - 90 Shore 2 OR type 3087 (21.89x2.62) - 90 Shore **DXRE9J*** 4 OR type 3150 (37.77x2.62) - 90 Shore 2 OR type 3087 (20.24x2.62) - 90 Shore
2	Main connection
3	Electrical connector (**to be ordered separately**). See point 17
4	Air breather. Sealed at the factory (**NOTE**)

Valve fastening: 6 SHC screws ISO 4762 M12x60
Tightening torque: 69 Nm (A8.8 screws)
Threads of mounting holes: M12x20

13 - DXRE10J* / DXRE11J* - OVERALL AND MOUNTING DIMENSIONS

dimensions in mm

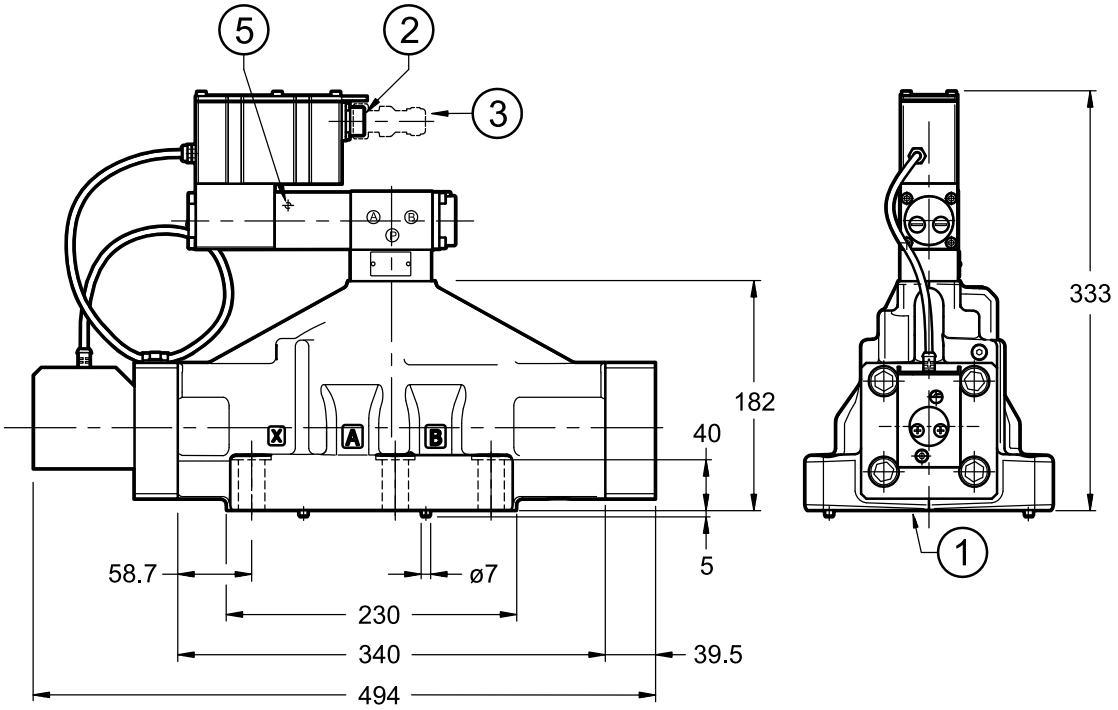

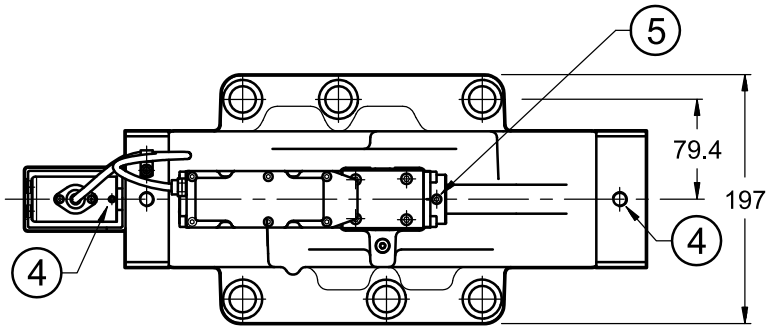

NOTES:
- See point 14 for the mounting surface.
- Do not dismantle the transducer.
- The valve is filled with mineral oil during testing. The breathers on the pilot stage must not be opened without specific authorization.
  Breaking the seals may cause the loss of the guarantee.

DXRE10JH / DXRE11JH

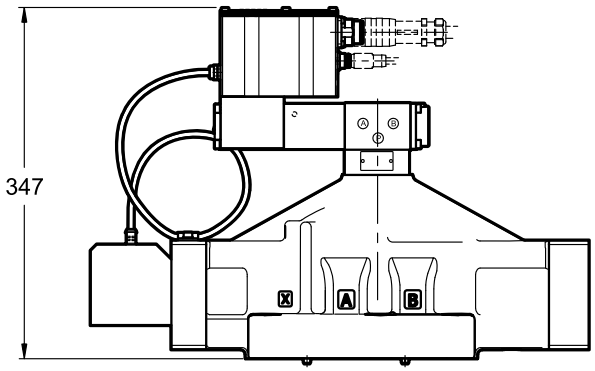

1	Mounting surface with sealing rings: **DXRE10J*** 4 OR type 4162 (40.86x3.53) - 90 Shore 2 OR type 3081 (20.24x2.62) - 90 Shore **DXRE11J*** 4 OR type 4212 (53.57x3.53) - 90 Shore 2 OR type 3081 (20.24x2.62) - 90 Shore
2	Main connection
3	Electrical connector (**to be ordered separately**). See point 17
4	Air breather. Sealed at the factory (**NOTE**)
5	M12 eyebolt seat for safe lift

Valve fastening: 6 SHC screws ISO 4762 M20x70 (supplied)
Tightening torque: 470 Nm (A10.9 screws)
Threads of mounting holes: M20x40

14 - MOUNTING SURFACES

DXRE5RJ*
ISO 4401-05-05-0-05
(CETOP 4.2-4 R05-350)

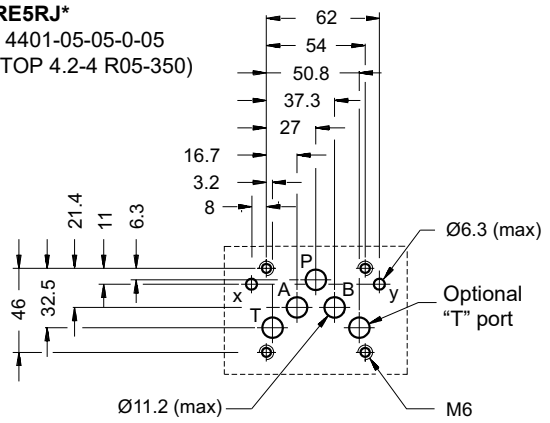

DXRE7J*
ISO 4401-07-07-0-05
(CETOP 4.2-4-07-350)

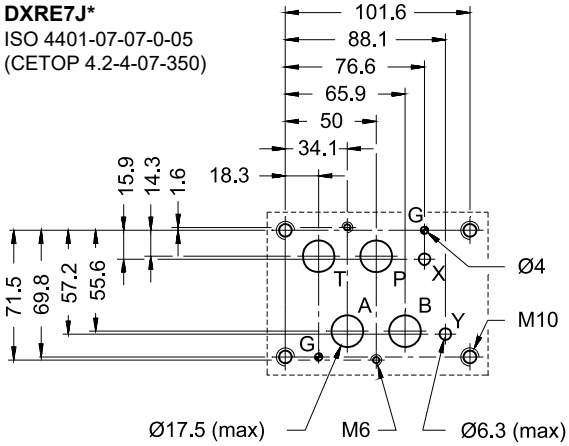

DXRE8J*
ISO 4401-08-08-0-05
(CETOP 4.2-4-08-350)

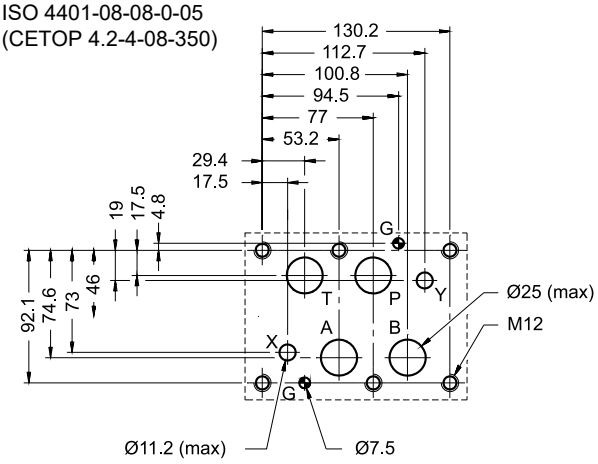

DXRE9J*
ISO 4401-08-08-0-05

deviating from standard:
P, T, A, B ports Ø32

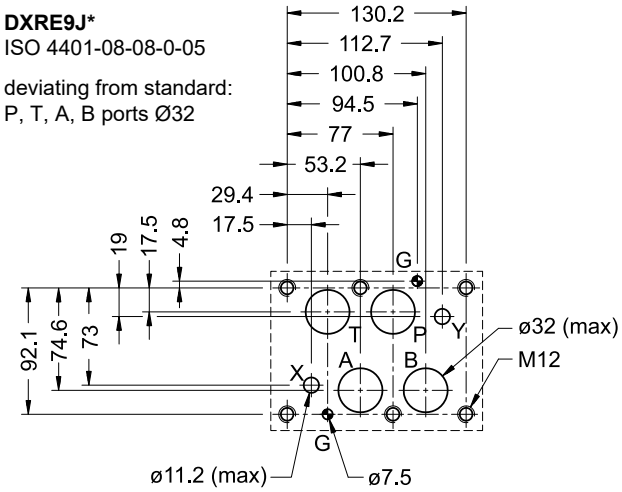

DXRE10J*
ISO 4401-10-09-0-05
(CETOP 4.2-4-10-350)

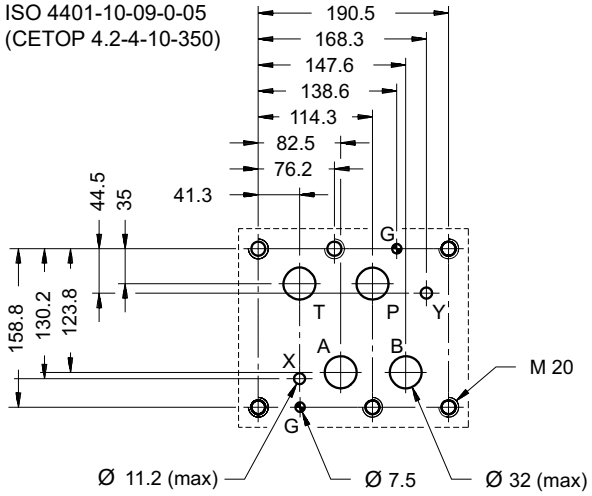

DXRE11J*
ISO 4401-10-09-0-05

deviating from standard:
P, T, A, B ports Ø48

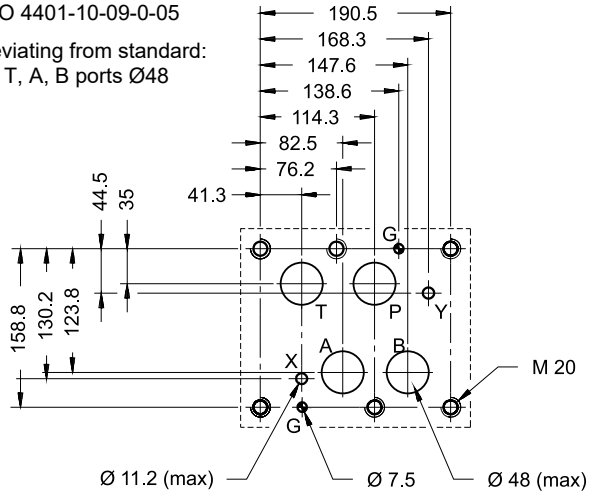

15 - HYDRAULIC FLUIDS

Use mineral oil-based hydraulic fluids HL or HM type, according to ISO 6743-4. For these fluids, use NBR seals. For fluids HFDR type (phosphate esters) use FPM seals (code V). For the use of other kinds of fluid such as HFA, HFB, HFC, please consult our technical department.

Using fluids at temperatures higher than 80 °C causes a faster degradation of the fluid and of the seals characteristics. The fluid must be preserved in its physical and chemical characteristics.

16 - INSTALLATION

The valves can be installed in any position without impairing correct operation. Make sure the hydraulic circuit is free of air.

Valves are fixed by means of screws or tie rods on a flat surface with planarity and roughness equal to or better than those indicated in the relative symbols. If minimum values are not observed, fluid can easily leak between the valve and support surface.

Take care to the cleanliness of the mounting surfaces and surrounding environment upon installation.

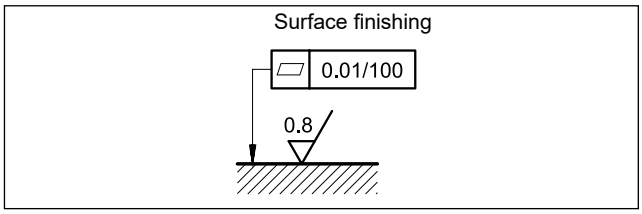

17 - ACCESSORIES
(to be ordered separately)

17.1 - Mating connectors

Mating connectors must be ordered separately. See catalogue 89 000.

We recommend the choice of a metal connector to avoid electromagnetic disturbances and to comply with EMC regulations on electromagnetic compatibility. If you opt for a plastic connector, make sure that it guarantees and maintains the IP and EMC protection characteristics of the valve.

17.2 - Mating connectors for fieldbus communication.

Duplomatic offers spare parts to be wired and also ready-to-use cord sets. Please refer to cat. 89 000.

17.3 - Connection cable

The optimal wiring provides for 7 isolated conductors, with separate screen for the signal wires (command, monitor) and an overall screen.

Cross section for power supply:
- up to 20 m cable length : 1,0 mm^2
- up to 40 m cable length : 1,5 mm^2

Cross section for signals (command, monitor):
- 0,50 mm^2

17.4 - Kit for start-up LINPC-USB

Device for service start-up and diagnostic. See catalogue 89 850.

18 - SUBPLATES
(see catalogue 51 000)

Subplates are not available for DXRE5RJ, DXRE9J, DXRE10J and DXRE11J.

		DXRE7J*	DXRE8J*
with rear ports		PME07-AI6G	-
with side ports		PME07-AL6G	PME5-AL8G
thread of ports:	P - T - A - B X - Y	1” BSP 1/4” BSP	1½” BSP 1/4” BSP

DUPLOMATIC MOTION SOLUTIONS
a member of DAIKIN group

DUPLOMATIC MS Spa
via Mario Re Depaolini, 24 | 20015 Parabiago (MI) | Italy
T +39 0331 895111 | E vendite.ita@duplomatic.com | sales.exp@duplomatic.com
duplomaticmotionsolutions.com

REPRODUCTION IS FORBIDDEN. THE COMPANY RESERVES THE RIGHT TO APPLY ANY MODIFICATIONS.