# DSC*

## DIRECTIONAL CONTROL VALVE, DIRECT OPERATED, HYDRAULICALLY ACTUATED

**SUBPLATE MOUNTING**
**DSC3 ISO 4401-03**
**DSC5 ISO 4401-05**

**p** max (see performances table)
**Q** nom (see performances table)

### OPERATING PRINCIPLE

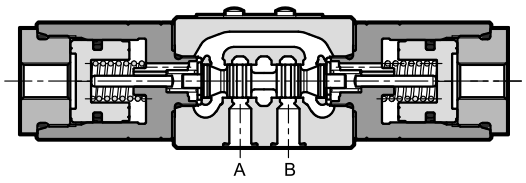


— DSC3 and DSC5 are direct operated directional control valves, with hydraulic actuation.

— They are available in 3-port or 4-port versions, with different types of spools and mounting surface according to ISO 4401-03 and ISO 4401-05.

— The valves are available with 2 or 3 positions with spring return, or with two positions and mechanical detent.

— The valve body is made of high strength cast iron and features large internal paths designed to minimize pressure drops.

### PERFORMANCES

(measured with mineral oil of viscosity 36cSt at 50°C)

| | | DSC3 | DSC5 |
|---|---|---|---|
| Maximum working pressure:<br>- P- A - B ports<br>- T port | bar | 350<br>25 | 320<br>25 |
| Pilot pressure<br>- min<br>- max | bar | 15 (**NOTE**)<br>210 | |
| Nominal flow rate | l/min | 75 | 150 |
| Ambient temperature range | °C | -20 / +60 | |
| Fluid temperature range | °C | -20 / +80 | |
| Fluid viscosity range | cSt | 10 ÷ 400 | |
| Fluid contamination degree | According to ISO 4406:1999 class 20/18/15 | | |
| Recommended viscosity | cSt | 25 | |
| Mass: single operator<br>dual operator | kg | 1.3<br>1.7 | 3.6<br>4.2 |

**NOTE**: The pilot pressure must be at least 15 bar higher than the backpressure on the T line: to allow the spool to quickly return to the central position, the pilot pressure must drop rapidly to 0 bar.

The return spring of the plunger generates a minimum backpressure of 1.0 bar on the pilot line.

## 1 - IDENTIFICATION CODE

| D | S | C | | - | | / | | | |
|---|---|---|---|---|---|---|---|---|---|

Directional valve with spool

Hydraulically actuated

Size:
**3** = ISO 4401-03
**5** = ISO 4401-05

Spool type (see point 4)
RK, RK1, TA02 and TB02 spools are available for DSC3 valve only.

| | | |
|---|---|---|
| **S*** | **TA** | **TA*** |
| **SA*** | **TB** | **TB*** |
| **SB*** | **RK** | **RK1** |

Series No.:
**12** for DSC3 (the overall and mounting dimensions remain unchanged from 10 to 19)
**10** for DSC5 (the overall and mounting dimensions remain unchanged from 10 to 19)

Seals:
**N** = NBR seals for mineral oil (**standard**)
**V** = FPM seals for special fluids

Option:
**/ W7** = Zinc-nickel surface treatment (see **NOTE**)
Omit if not required

**NOTE**: The standard valve is supplied with surface treatment of phosphating black.
The zinc-nickel finishing on the valve body makes the valve suitable to ensure a salt spray resistance up to **600** hours.
(test operated according to UNI EN ISO 9227 standards and test evaluation operated according to UNI EN ISO 10289 standards).

## 2 - MOUNTING SURFACES

**DSC3**

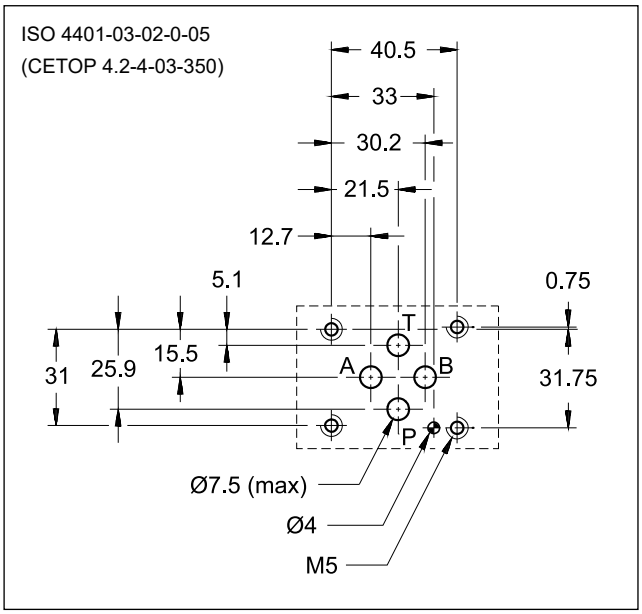


**DSC5**

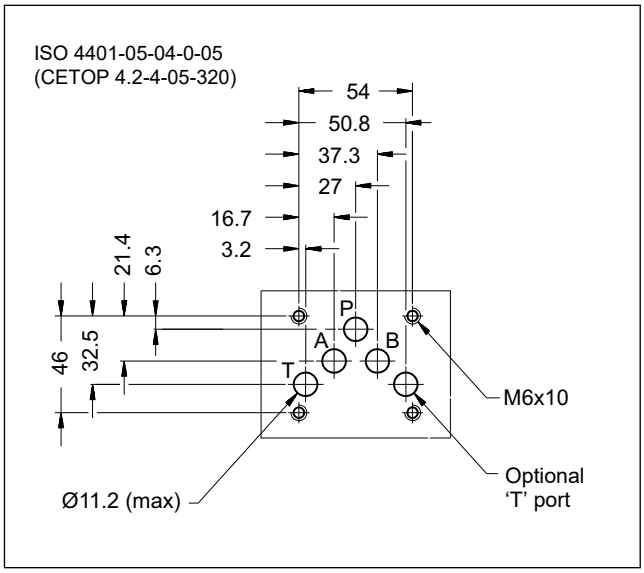


## 3 - HYDRAULIC FLUIDS

Use mineral oil-based hydraulic fluids HL or HM type, according to ISO 6743-4. For these fluids, use NBR seals (code N). For fluids HFDR type (phosphate esters) use FPM seals (code V).

For the use of other fluid types such as HFA, HFB, HFC, please consult our technical department. Using fluids at temperatures higher than 80 °C causes a faster degradation of the fluid and of the seals characteristics. The fluid must be preserved in its physical and chemical characteristics.

## 4 - SPOOL TYPES

RK, RK1, TA02 and TB02 spools are available for DSC3 valve only.

Type **S***:
2 operators - 3 positions
with spring centering

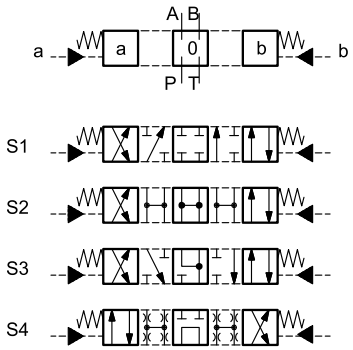


Type **SA***:
1 operator side A
2 positions (central + external)
with spring centering

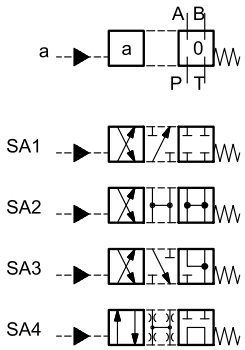


Type **SB***:
1 operator side B
2 positions (central + external)
with spring centering

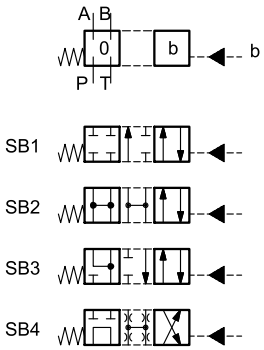


Type **RK**:
2 operators - 2 positions
with detent

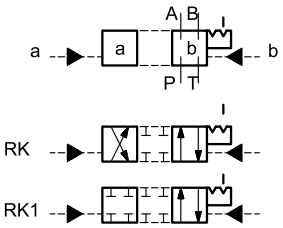


Type **TA**:
1 operator side A
2 external positions
with spring return

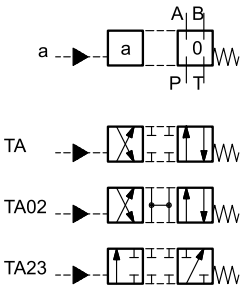


Type **TB**:
1 operator side B
2 external positions
with spring return

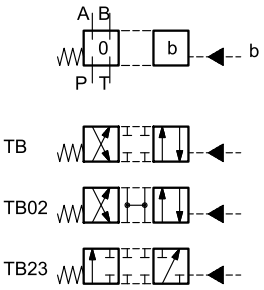


Besides the diagrams shown, which are the most frequently used, other special versions are available: consult our technical department for their identification and operating limits.

## 5 - PRESSURE DROPS ΔP-Q

(values obtained with viscosity 36 cSt at 50 °C)

### 5.1 - DSC3

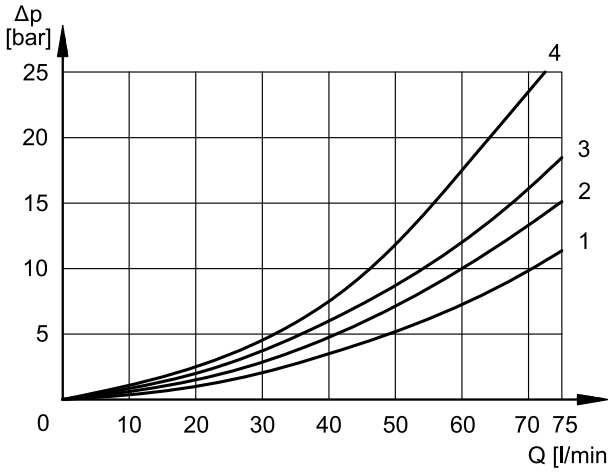


**PRESSURE DROPS WITH ACTUATED VALVE**

| SPOOL TYPE | FLOW DIRECTION | | | |
|---|---|---|---|---|
| | P→A | P→B | A→T | B→T |
| | CURVES ON GRAPH | | | |
| S1, SA1, SB1 | 2 | 2 | 3 | 3 |
| S2, SA2, SB2 | 1 | 1 | 3 | 3 |
| S3, SA3, SB3 | 3 | 3 | 1 | 1 |
| S4, SA4, SB4 | 4 | 4 | 4 | 4 |
| TA, TB | 3 | 3 | 3 | 3 |
| TA02, TB02 | 2 | 2 | 2 | 2 |
| TA23, TB23 | 3 | 3 | | |
| RK, RK1 | 2 | 2 | 2 | 2 |

**PRESSURE DROPS WITH VALVE IN CENTER POSITION**

| SPOOL TYPE | FLOW DIRECTION | | | | |
|---|---|---|---|---|---|
| | P→A | P→B | A→T | B→T | P→T |
| | CURVES ON GRAPH | | | | |
| S2, SA2, SB2 | | | | | 2 |
| S3, SA3, SB3 | | | 3 | 3 | |
| S4, SA4, SB4 | | | | | 3 |

### 5.2 - DSC5

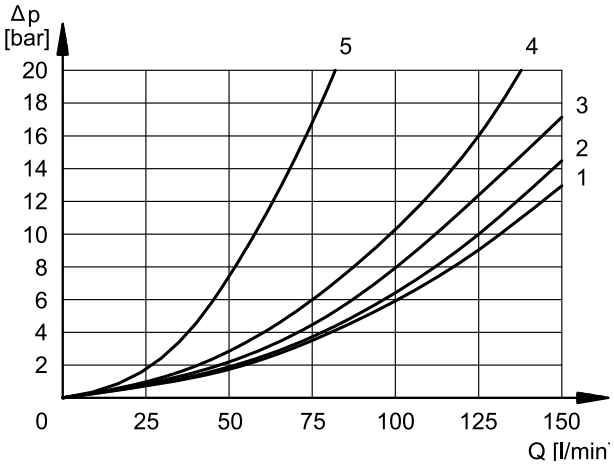


**PRESSURE DROPS WITH ACTUATED VALVE**

| SPOOL TYPE | FLOW DIRECTION | | | |
|---|---|---|---|---|
| | P→A | P→B | A→T | B→T |
| | CURVES ON GRAPH | | | |
| S1, SA1, SB1 | 2 | 2 | 1 | 1 |
| S2, SA2, SB2 | 3 | 3 | 1 | 1 |
| S3, SA3, SB3 | 3 | 3 | 2 | 2 |
| S4, SA4, SB4 | 1 | 1 | 2 | 2 |
| TA, TB | 3 | 3 | 2 | 2 |
| TA23, TB23 | 4 | 4 | | |

**PRESSURE DROPS WITH VALVE IN CENTER POSITION**

| SPOOL TYPE | FLOW DIRECTION | | | | |
|---|---|---|---|---|---|
| | P→A | P→B | A→T | B→T | P→T |
| | CURVES ON GRAPH | | | | |
| S2, SA2, SB2 | | | | | 4 |
| S3, SA3, SB3 | | | 5 | 5 | |
| S4, SA4, SB4 | | | | | 4 |

## 6 - OPERATING LIMITS

The curves define the flow rate operating range based on the valve pressure for the different versions.

The values have been obtained according to ISO 6403 standard, with mineral oil viscosity 36 cSt at 50 °C and filtration according to ISO 4406:1999 class 18/16/13.

**NOTE: The values shown in the graphs refer to the standard valve. Operating limits may be significantly reduced using a 4-port valve with port A or B plugged or without flow.**

### 6.1 - DSC3

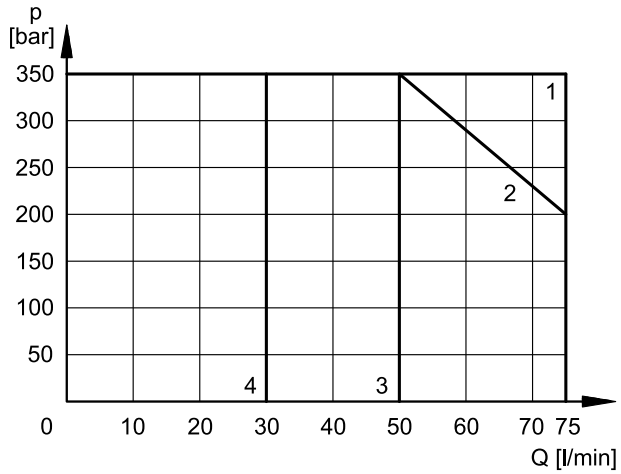


| SPOOL TYPE | CURVE | |
|---|---|---|
| | P→A | P→B |
| S1, SA1, SB1 | 2 | 2 |
| S2, SA2, SB2 | 3 | 3 |
| S3, SA3, SB3 | 2 | 2 |
| S4, SA4, SB4 | 3 | 3 |

| SPOOL TYPE | CURVE | |
|---|---|---|
| | P→A | P→B |
| TA, TB | 2 | 2 |
| TA02, TB02 | 3 | 3 |
| TA23, TB23 | 2 | 2 |
| RK | 4 | 4 |
| RK1 | 1 | 1 |

### 6.2 - DSC5

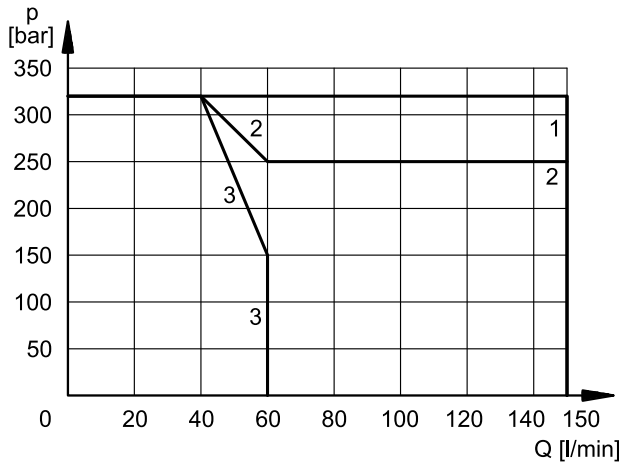


| SPOOL TYPE | CURVE | |
|---|---|---|
| | P→A | P→B |
| S1, SA1, SB1 | 1 | 1 |
| S2, SA2, SB2 | 1 | 1 |
| S3, SA3, SB3 | 2 | 2 |
| S4, SA4, SB4 | 3 | 3 |

| SPOOL TYPE | CURVE | |
|---|---|---|
| | P→A | P→B |
| TA, TB | 1 | 1 |
| TA23, TB23 | 2 | 2 |

## 7 - DSC3 - OVERALL AND MOUNTING DIMENSIONS

dimensions in mm

**DSC3-S***
**DSC3-RK**
**DSC3-RK1**

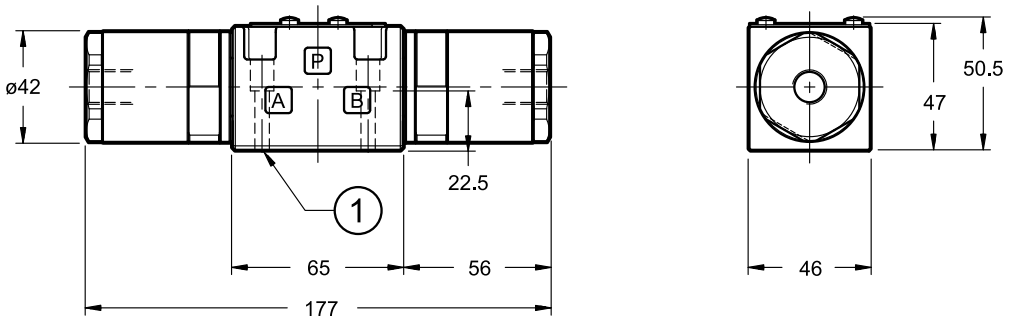


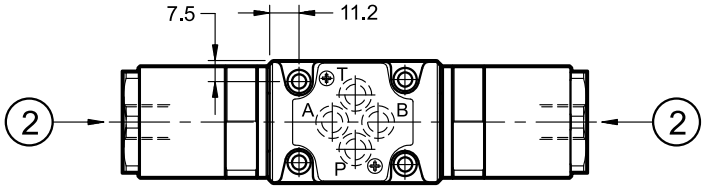


**DSC3-SA***
**DSC3-TA**
**DSC3-TA***

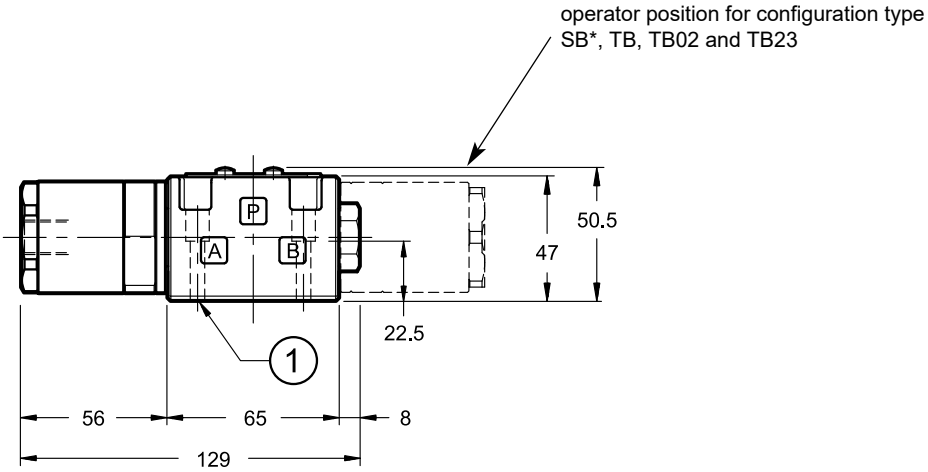


| | |
|---|---|
| Valve fastening: 4 SHC screws ISO 4762 M5x30 | |
| Tightening torque: 5 Nm (screws A8.8) | |
| Threads of mounting holes: M5x10 | |

| | |
|---|---|
| 1 | Mounting surface with sealing rings:<br>N. 4 OR type 2037 (9.25x1.78) - 90 Shore |
| 2 | 1/4" BSP connection for hydraulic actuation |

## 8 - DSC5 - OVERALL AND MOUNTING DIMENSIONS

**DSC5-S***

dimensions in mm

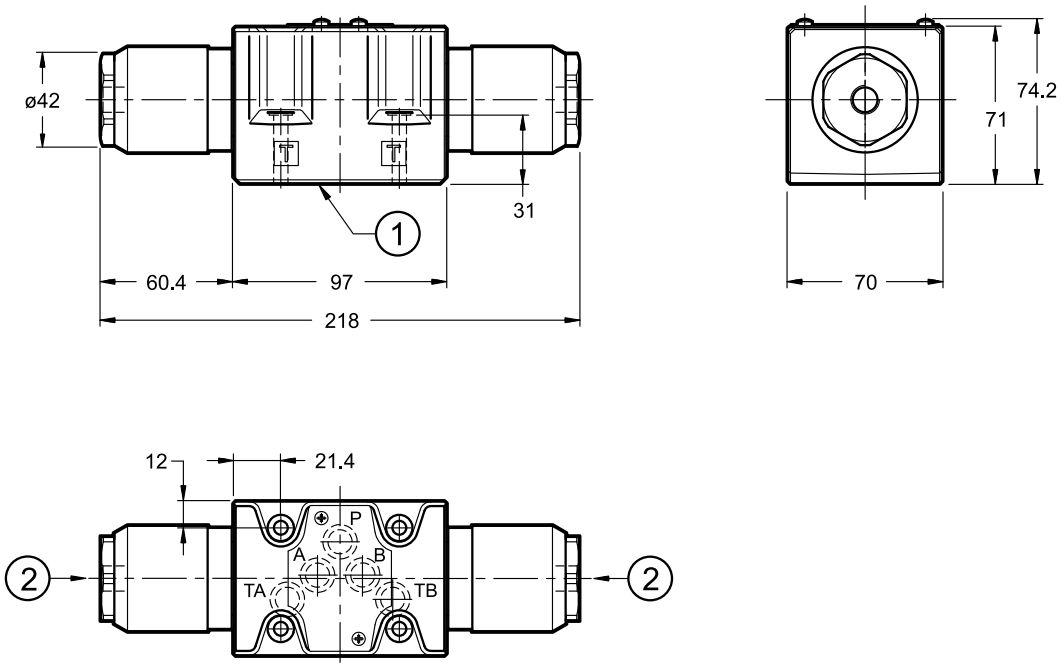


**DSC5-SA***
**DSC5-TA**
**DSC5-TA23**

operator position for configuration type SB*, TB and TB23

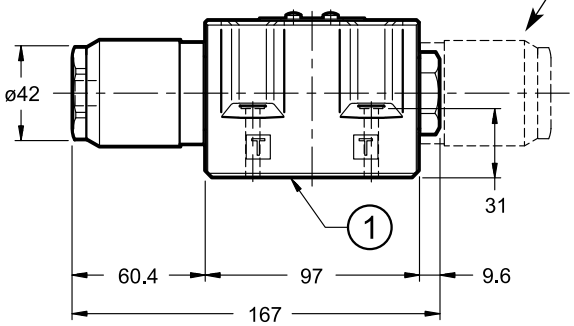


| | |
|---|---|
| Valve fastening: 4 SHC screws ISO 4762 M6x40 | |
| Tightening torque: 8 Nm (screws A8.8) | |
| Threads of mounting holes: M6x10 | |

| | |
|---|---|
| 1 | Mounting surface with sealing rings: 5 OR type 2050 (12.42x1.78) - 90 Shore |
| 2 | 1/4” BSP connection for hydraulic actuation |

## 9 - INSTALLATION

Configurations with centering and return springs can be installed in any position; RK type valves - without springs and with mechanical detent - must be mounted with the longitudinal axis horizontal.

Valve fixing is by means of screws or tie rods, with the valve mounted on a lapped surface, with values of planarity and smoothness that are equal to or better than those indicated in the drawing. If the minimum values of planarity and/or smoothness are not met, fluid leakage between valve and mounting surface can easily occur.

Surface finishing

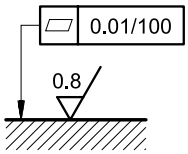


## 10 - SUBPLATES

(see cat. 51 000)

| | DSC3 | DSC5 |
|---|---|---|
| With rear ports | PMMD-AI3G | PMD4-AI4G - thread 3/4” BSP |
| Type with side ports | PMMD-AL3G | PMD4-AL4G - thread 1/2” BSP |
| Thread of ports P, T, A, B | 3/8” BSP | |

DUPLOMATIC MOTION SOLUTIONS
a member of DAIKIN group

**DUPLOMATIC MS Spa**
via Mario Re Depaolini, 24 | 20015 Parabiago (MI) | Italy
T +39 0331 895111 | E vendite.ita@duplomatic.com | sales.exp@duplomatic.com
duplomaticmotionsolutions.com


REPRODUCTION IS FORBIDDEN. THE COMPANY RESERVES THE RIGHT TO APPLY ANY MODIFICATIONS.