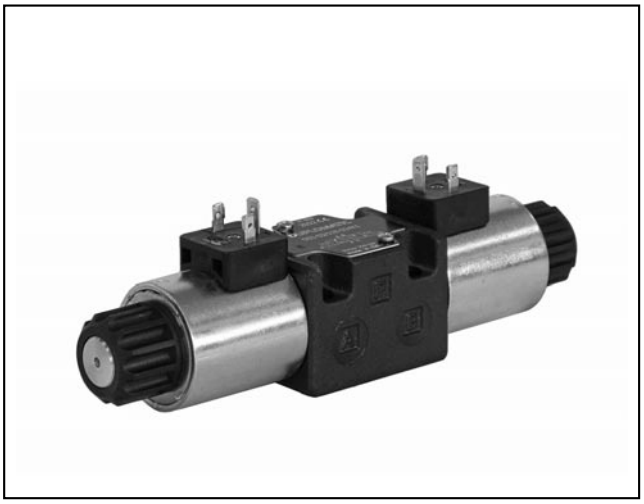

DS3

SOLENOID OPERATED DIRECTIONAL CONTROL VALVE

SUBPLATE MOUNTING ISO 4401-03

p max **350** bar
Q max **100** l/min

MOUNTING INTERFACE

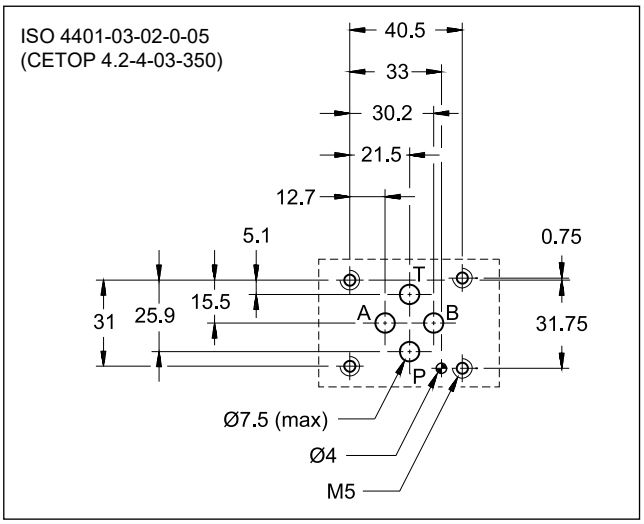

OPERATING PRINCIPLE

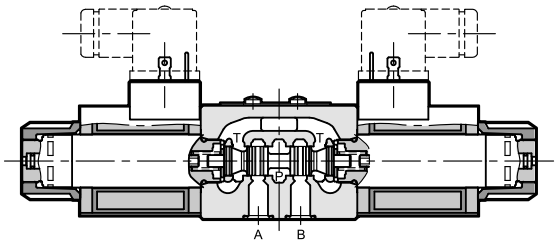

— Solenoid actuated directional control valve, direct operated, with mounting surface according to ISO 4401-03 standards.

— The valve is supplied with 3- or 4-port design, with 2 or 3 positions with a wide range of spools.

— The valve body is made with high strength iron castings provided with wide internal paths in order to minimize the flow pressure drop. Wet armature solenoids with interchangeable coils are used (for further information on solenoids see point 7).

— The valve is available with DC or AC solenoids. DC solenoids can also be fed with AC power supply, by using connectors with a built-in rectifier bridge (see points 6.3 and 7.3).

— Versions with UL Recognized DC coils are available for the North American market.

— The DC valve is also available in a soft-shifting version (see point 15).

— DC versions can be supplied with zinc-nickel surface treatment, suitable for salt spray resistance up to 600 hours.

— Alternative to the standard manual override there are lever, push button, knob, push and twist, boot and mechanical detent devices.

PERFORMANCES

(obtained with mineral oil with viscosity of 36 cSt at 50°C)

		CC	CA
Maximum operating pressure: - P - A - B ports - T port	bar	350 210	160
Maximum flowrate	l/min	100	
Pressure drops Δp-Q	see point 4		
Operating limits	see point 6		
Electrical features	see point 7		
Electrical connections	see point 12		
Ambient temperature range	°C	-20 / +50	
Fluid temperature range	°C	-20 / +80	
Fluid viscosity range	cSt	10 ÷ 400	
Fluid contamination degree	according to ISO 4406:1999 class 20/18/15		
Recommended viscosity	cSt	25	
Mass: single solenoid valve double solenoid valve	kg	1.5 2	1.4 2

1 - IDENTIFICATION CODE

D	S	3	-		/	11		-				/		

Directional valve, solenoid operated

ISO 4401-03 size

Spool type (see point 3)

S*	**RSA***	**TA**	**RK**
SA*	**RSB***	**TB**	
SB*		**RTA**	
		RTB	
		TA*	
		TB*	

Series:
(the overall and mounting dimensions remain unchanged from 10 to 19)

Seals:
N = NBR seals for mineral oil (**standard**)
V = FPM seals for special fluids

DC power supply

D12 = 12 V
D14 = 14 V
D24 = 24 V
D26 = 26.4 V
D48 = 48 V
D110 = 110 V
D125 = 125 V
D220 = 220 V
D00 = valve without coils, with locking rings and O-rings

AC power supply
A24 = 24 V - 50 Hz
A48 = 48 V - 50 Hz
A100 = 100 V - 50 Hz / 100 V - 60 Hz
A110 = 110 V - 50 Hz / 120 V - 60 Hz
A230 = 230 V - 50 Hz / 240 V - 60 Hz
A00 = valve without coils, with locking rings and O-rings
F110 = 110 V - 60 Hz
F220 = 220 V - 60 Hz

Option:
/ W7 = Zinc-nickel surface treatment (see **NOTE**)
Not available for AC valves.
Omit if not required (standard treatment: black phosphating)

Manual override:
(see point 14)
Omit for override integrated into the tube (**standard**)
CM = boot protected manual override

For DC versions only, the following options are also available:
CH = lever manual override
Not available for RS*3 and RS*4.
CH1 = long lever manual override
Not available for RS*3 and RS*4.
CP = push manual override
CK1 = turning knob override
CK2 = push-and-twist override
CPK = push manual override with mechanical detent

Coil electrical connection
(see point 12):
K1 = plug for connector type EN 175301-803 (ex DIN 43650)
K2 = plug for connector type AMP JUNIOR
K7 = plug DEUTSCH DT04-2P for male connector type DEUTSCH DT06-2S
K7D = plug DEUTSCH DT04-2P for male connector type DEUTSCH DT06-2S, with diode

Coil version (see availability table):
Omit for standard zinc-plated version
W = corrosion-protected (point 8)
ULW = UL Recognized, corrosion-protected (points 7.2 and 8)

NOTE: The valve protection level against atmospheric agents depends on the combination of the fitted components (configuration). See point 8 for further details.

AVAILABILITY

Voltage	electr. conn.	coil version std	W	ULW
D12, D24	K1	■	■	■
	K2	-	-	■
	K7	-	-	■
	K7D	-	■	-
D26	K1	-	■	■
	K7	-	-	■
D14, D48, D110, D125, D220	K1	-	-	■
A*, F*	K1	■	-	-

2 - HYDRAULIC FLUIDS

Use mineral oil-based hydraulic fluids HL or HM type, according to ISO 6743-4. For these fluids, use NBR seals (code N). For fluids HFDR type (phosphate esters) use FPM seals (code V). For the use of other fluid types such as HFA, HFB, HFC, please consult our technical department.

Using fluids at temperatures higher than 80 °C causes a faster degradation of the fluid and of the seals characteristics. The fluid must be preserved in its physical and chemical characteristics.

3 - SPOOL TYPES

Type **S***:
2 solenoids - 3 positions
with spring centering

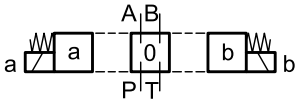

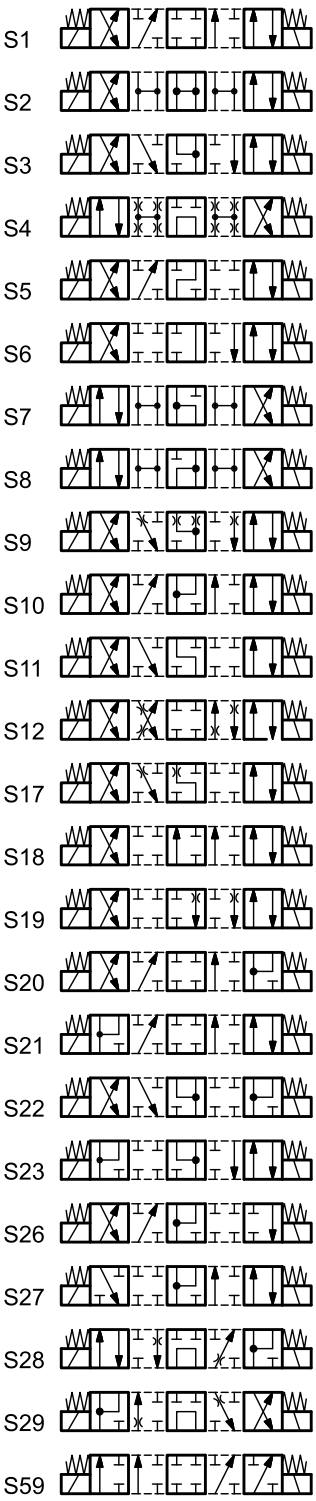

Type **SA***:
1 solenoid side A
2 positions (central + external)
with spring centering

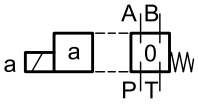

Type **SB***:
1 solenoid side B
2 positions (central + external)
with spring centering

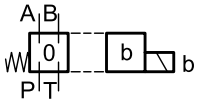

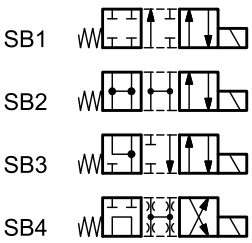

Type **RSA***:
1 solenoid side A
2 positions (external + central)
with return spring

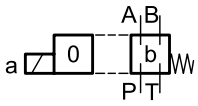

Type **RSB***:
1 solenoid side B
2 positions (external + central)
with return spring

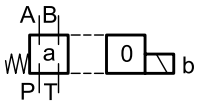

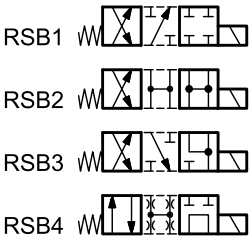

Besides the diagrams shown, which are the most frequently used, other special versions are available: consult our technical department for their identification, feasibility and operating limits.

Type **RK**:
2 solenoids - 2 positions
with mechanical retention

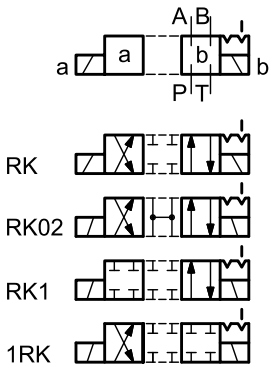

Type **TA**:
1 solenoid side A
2 external positions
with return spring

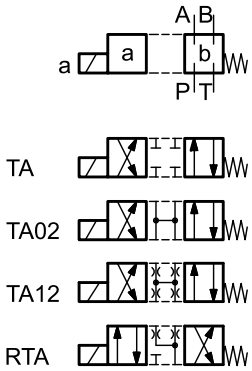

Type **TB**:
1 solenoid side B
2 external positions
with return spring

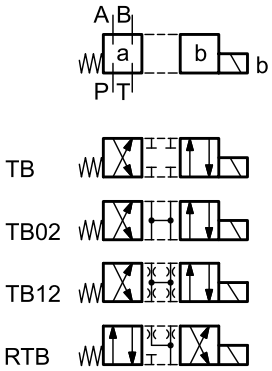

Type **TA***:
1 solenoid side A
2 positions with return spring

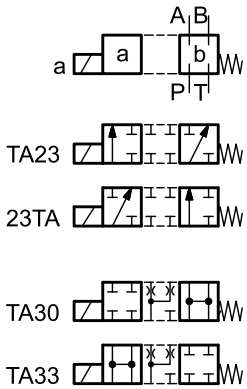

Type **TB***:
1 solenoid side B
2 positions with return spring

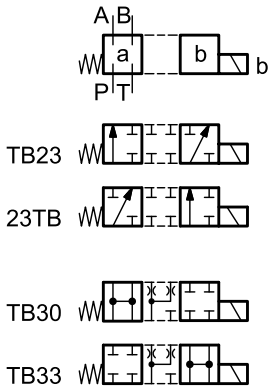

Besides the diagrams shown, which are the most frequently used, other special versions are available: consult our technical department for their identification, feasibility and operating limits.

4 - PRESSURE DROPS Δp-Q

(obtained with viscosity 36 cSt at 50 °C)

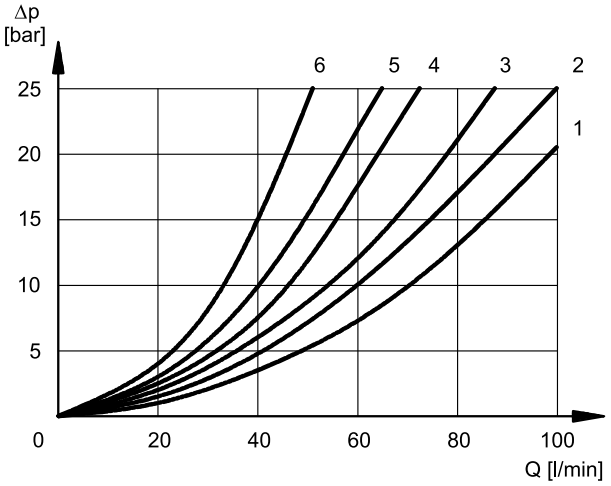

Refer to curve 5 for the pressure drops between working lines A and B of the spools S10, S20, S21, S22 and S23 used in regenerative schemes.

Refer to curve 3 for pressure drop P → T of the TA33 / TB33 spool.

ACTUATED POSITION

SPOOL TYPE	FLOW DIRECTION			
	P→A	P→B	A→T	B→T
	CURVES ON GRAPH			
S1, SA1, SB1	2	2	3	3
S2, SA2, SB2	1	1	3	3
S3, SA3, SB3, RSA3, RSB3	3	3	1	1
S4, SA4, SB4, RSA4, RSB4	5	5	5	5
S5	2	1	3	3
S6	2	2	3	1
S7, S8	4	5	5	5
S9	2	2	3	3
S10	1	3	1	3
S11	2	2	1	3
S12, S17, S19	2	2	3	3
S18	1	2	3	3
S20, S22	1	5	2	
S21, S23	5	1		2
S28	6	5	-	6
S29	5	6	6	-
S59	3	3	-	-
TA, TB	3	3	3	3
RTA	2	3	3	2
RTB	3	2	2	3
TA02, TB02	2	2	2	2
TA23, TB23	3	3		
TA33, TB33			3	2
RK, RK02, RK1, 1RK	2	2	2	2

NORMAL POSITION

SPOOL TYPE	FLOW DIRECTION				
	P→A	P→B	A→T	B→T	P→T
	CURVES ON GRAPH				
S2, SA2, SB2					2
S3, SA3, SB3, RSA3, RSB3			3	3	
S4, SA4, SB4, RSA4, RSB4					3
S5		4			
S6				3	
S7, S8			6	6	3
S10	3	3			
S11			3		
S18	4				
S22, S23			3	3	
S28, S29				6	

5 - SWITCHING TIMES

The values indicated are obtained according to ISO 6403 standard, with mineral oil viscosity 36 cSt at 50°C.

SUPPLY	**TIMES [ms]**	
	ENERGIZING	DE-ENERGIZING
DC	25 ÷ 75	15 ÷ 25
AC	10 ÷ 25	15 ÷ 40

6 - OPERATING LIMITS

The curves define the flow rate operating fields according to the valve pressure of the different versions. The values have been obtained according to ISO 6403 norm with solenoids at rated temperature and supplied with voltage equal to 90% of the nominal voltage. The value have been obtained with mineral oil, viscosity 36 cSt, temperature 50 °C and filtration according to ISO 4406:1999 class 18/16/13.

The limits for TA02 and TA spools refer to the 4-port operation. The operating limits of a 4-port valve in 3-port operation or with port A or B plugged or without flow are shown in the chart on the next page. The performance of the DC solenoid powered by AC with rectifier connectors are at point 6.4. The operating limits of the soft-shift valve are shown at point 14.

6.1 - Valves in standard operation

DC SOLENOID VALVE

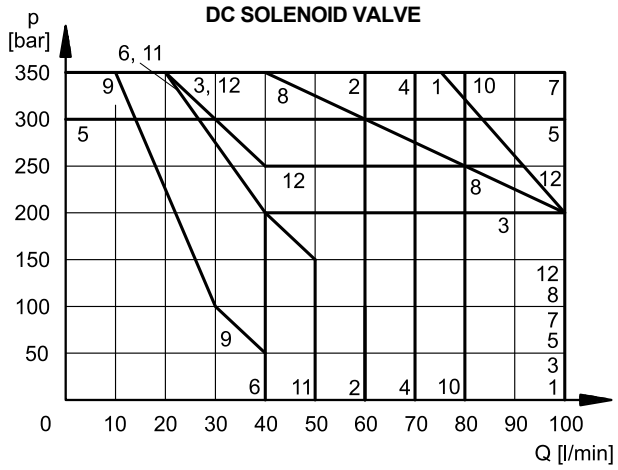

AC SOLENOID VALVE

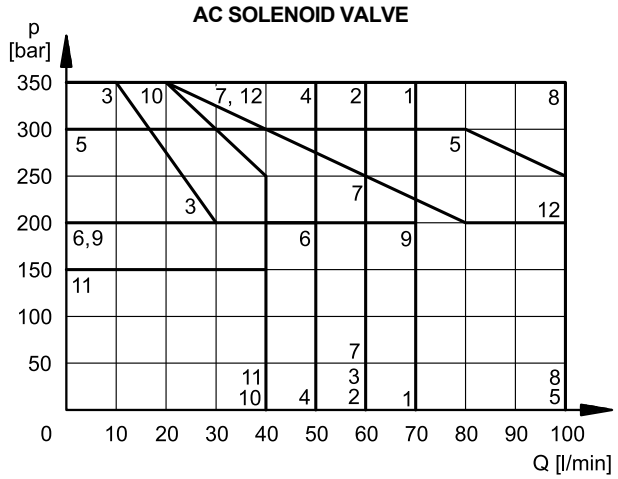

RSA* AND RSB* SPOOLS, AC AND DC

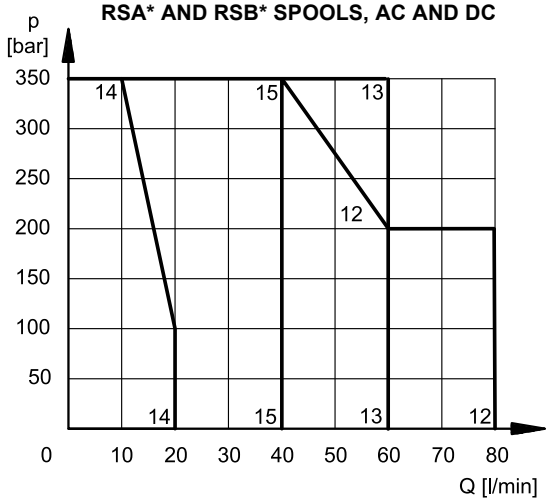

DC SOLENOID VALVE

SPOOL	CURVE	
	P→A	P→B
S1,SA1,SB1	1	1
S2, SA2, SB2	2	2
S3, SA3, SB3	3	3
S4, SA4, SB4	4	4
S5	5	5
S6	4	6
S7	4	4
S8	4	4
S9	7	7
S10	7	7
S11	4	6
S12	1	1
S17	4	4
S18	5	5
S19	4	4
S20	6*	6
S21	6	6*
S22	6	6
S23	6	6
S28	9*	9*
S29	9*	9*
S59	10	10
TA, TB	7	7
TA02, TB02	8	8
TA30	1	-
RTA, RTB	11	11
TA23, TB23	2	2
TA33, TB33	12	12
RK	7	7
RK02	8	8
RK1, 1RK	7	7

AC SOLENOID VALVE

SPOOL	CURVE	
	P→A	P→B
S1,SA1,SB1	1	1
S2, SA2, SB2	2	2
S3, SA3, SB3	3	3
S4, SA4, SB4	2	2
S5	5	5
S6	6	6
S7	4	4
S8	4	4
S9	7	7
S10	8	8
S11	6	6
S12	2	2
S17	7	7
S18	5	5
S19	7	7
S20	10*	10
S21	10	10*
S22	10*	10
S23	10	11*
S28		
S29		
S59	2	2
TA, TB	1	1
TA02, TB02	1	1
TA30	5	-
RTA, RTB	11	11
TA23, TB23	2	2
TA33, TB33	12	12
RK	8	8
RK02	9	9
RK1, 1RK	8	8

* Performance obtained for a valve with A and B lines connected the one to the piston-side chamber and the other to the rod-side chamber of a double-acting cylinder with area ratio 2:1.

SPOOL	CURVE
RSA1, RSB1	12
RSA2, RSB2	13
RSA3, RSB3	14
RSA4, RSB4	15

6.2 - 4-port valve in 3-port operation

Operating limits of a 4-port valve in 3-port operation or with port A or B plugged or without flow.

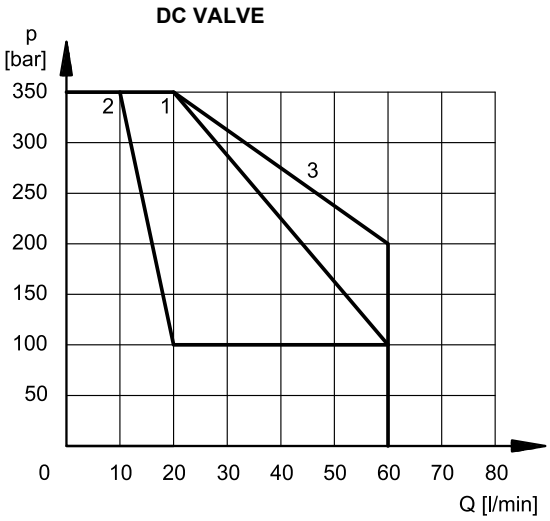

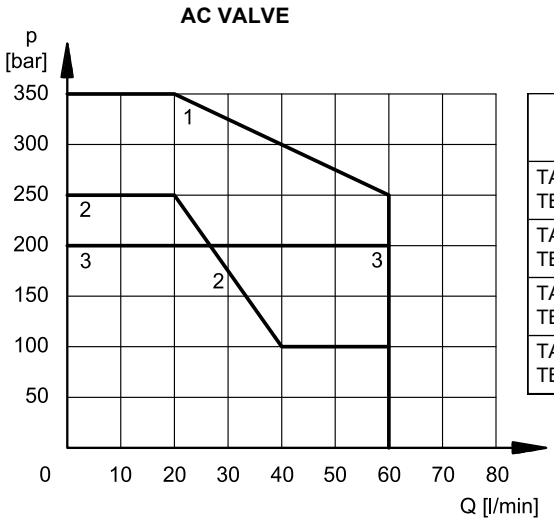

SPOOL	CURVE	
	DC	AC
TA backpr. A TB backpr. B	1	1
TA02 backpr. A TB02 backpr. B	1	1
TA backpr. B TB backpr. A	2	1
TA02 backpr. B TB02 backpr. A	3	3

6.3 - AC solenoid valve with coil A110 fed with 110V - 60 Hz

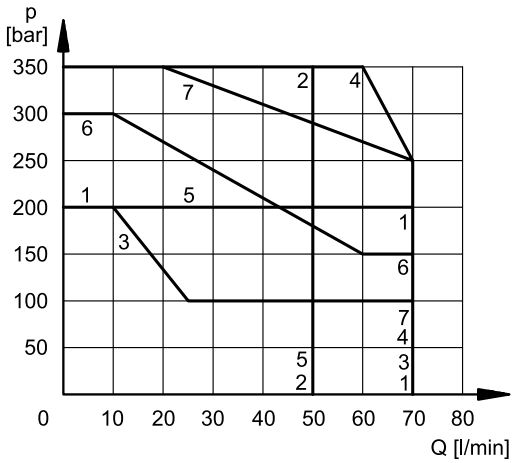

SPOOL	CURVE	
	P→A	P→B
S1,SA1, SB1	1	1
S2, SA2, SB2	2	2
S3, SA3, SB3	3	3
S4, SA4, SB4	4	4
S9	5	5
TA, TB	2	2
RK	6	6

6.4 - Operating limits for DC solenoid valves fed with AC with rectifier connectors

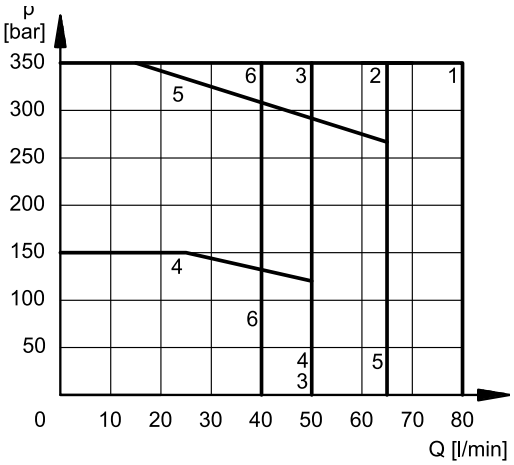

SPOOL	CURVE	
	P→A	P→B
S1, SA1, SB1	2	2
S2, SA2, SB2	3	3
S3, SA3, SB3	4	4
S4, SA4, SB4	2	2
S9	5	5
TA, TB	6	6
RK	1	1

7 - ELECTRICAL FEATURES

7.1 - Solenoids

These are essentially made up of two parts: tube and coil. The tube is threaded into the valve body and includes the armature that moves immersed in oil, without wear. The inner part, in contact with the oil in the return line, ensures heat dissipation. The coil is fastened to the tube by a threaded ring, and can be rotated 360°, to suit the available space.

7.2 - UL Recognized coils

ULW type coils are UL Recognized Components (cUR®us marking) intended for installation within end-use equipment that is subject to evaluation in accordance with the applicable UL and CSA standards.

SUPPLY VOLTAGE FLUCTUATION	± 10% Vnom
MAX SWITCH ON FREQUENCY	18,000 ins/hr
DUTY CYCLE	100%
ELECTROMAGNETIC COMPATIBILITY (EMC) (NOTE)	In compliance with 2014/30/EU
LOW VOLTAGE	In compliance with 2014/35/EU
CLASS OF PROTECTION Coil insulation (VDE 0580) Impregnation: DC valve AC valve	 class H class F class H

NOTE: To further reduce emissions, when using a DC power supply, type H connectors are recommended. These prevent overvoltage peaks when the coil supply circuit is opened (see catalogue 49 000).

7.3. - DC solenoid valve - current and power consumption

The table shows current and power consumption values of the DC coils.

Using connectors type ‘D’ or ‘D1’(see cat. 49 000) with embedded bridge rectifier it is possible to feed DC coils with alternating current (50 or 60 Hz), considering a reduction of the operating limits (see diagram at point 6.4).

(values ± 10%)

	nominal voltage [V]	resistance at 20°C [Ω]	current consumpt [A]	power consumpt [W]
D12	12	4.5	2.68	32.2
D14	14	6.6	2.11	29.5
D24 (std, W)	24	18.6	1.29	31
D24 (ULW)	24	16.6	1.45	34.7
D26	26.4	20.6	1.28	33.9
D48	48	77.7	0.62	29.7
D110	110	419.8	0.26	28.8
D125	125	532.9	0.23	29.3
D220	220	1670	0.13	29

7.3.1 - DC coils with diode

K7D coils incorporate a suppression diode providing protection against voltage peaks. During switching, the diode limits the voltage generated by the coil winding to 33 V for the D12 coil and 62 V for the D24 coil.

7.4 - AC solenoid valve - current and power consumption

The table shows current and power consumption values at inrush and at holding, for AC coils.

(values ± 5%)

	Nominal Voltage [V]	Freq. [Hz]	Resistance at 20°C [Ω]	Current consumption at inrush [A]	Current consumption at holding [A]	Power consumption at inrush [VA]	Power consumption at holding [VA]
A24	24	50	1.69	5.81	1.32	139	32
A48	48		6.02	3.78	0.86	182	41
A100	100V-50Hz	50/60	23.3	2.11	0.48	211	48
	100V-60Hz			1.63	0.37	163	37
A110	110V-50Hz		33	1.76	0.40	194	44
	120V-60Hz			1.54	0.35	185	42
A230	230V-50Hz		135	0.92	0.21	213	48
	240V-60Hz			0.79	0.18	190	43
F110	110	60	28.5	1.45	0.33	160	36
F220	220		103	0.92	0.21	203	46

8 - PROTECTION AGAINST ENVIRONMENTAL CONDITIONS

The valve protection against environmental conditions depends on the combination of its individual components (valve body, coils, electrical connection and manual override). This determines both the corrosion resistance level and the IP degree of protection.

8.1 - IP degree of protection

The IP degree of protection is defined according to IEC 60529 and indicates the level of protection against the ingress of solid objects and liquids.

The actual IP degree of protection of the valve depends on the type of electrical connection, the solenoid tube protection and the design solutions adopted. The stated IP degree of protection is guaranteed only when a connector with an equivalent degree of protection is correctly wired and installed.

coil version	electrical connection type	IP rating	
		electrical conn.	valve
standard	**K1**	IP65	IP65
W, ULW	**K1**	IP66	IP65
	K2	IP65/IP67	
	K7	IP66/IP68/IP69 IP69K*	
	K7D	IP66/IP68/IP69 IP69K*	
W, ULW + manual override type C*	**K1**	IP66	IP66
	K2	IP65/IP67	IP65/IP67
	K7	IP66/IP68/IP69 IP69K*	IP66/IP68/IP69 IP69K*
	K7D	IP66/IP68/IP69 IP69K*	IP66/IP68/IP69 IP69K*

(*) The IP69K degree of protection is not covered by IEC 60529 but is defined in ISO 20653.

IP Ratings: Selection Guide

The IP rating indicates protection against solid objects (first digit) and liquids (second digit). For solid objects, rating 6 is the highest level and provides complete dust protection. Our solenoid valves fall into this category.

For liquids, three types are distinguished:

- degree 1 to 6: protection against water jets;
- degree 7 and 8: protection against immersion;
- degree 9: protection against high-pressure, high-temperature water jets.

IP ratings are neither equivalent nor cumulative: IP66 covers lower ratings; IP68 covers IP67 only, not IP66, IP65 or lower ratings; IP69 does not cover any other rating.

Where a component complies with more than one type of protection, all applicable IP ratings shall be stated.

Example: equipment protected against powerful water jets and continuous immersion is marked IP66/IP68.

8.2 - Corrosion resistance

The valve body in the standard version is treated with a black phosphate coating, providing basic corrosion protection.

For applications requiring higher corrosion resistance, a zinc-nickel finish is available for the valve body (option /W7, point 1). When combined with standard coils, the zinc-nickel plated valve body provides corrosion resistance of up to 240 h in salt spray testing.

Complete valve configurations with a zinc-nickel finish on valve body, type W or ULW coils, and a type C* manual override providing solenoid tube protection provide corrosion resistance of up to 600 h in salt spray testing.

Salt spray tests are carried out in accordance with UNI EN ISO 9227, with results evaluated according to UNI EN ISO 10289.

The availability of the various protection levels depends on the combination of design options selected and may vary according to supply voltage, electrical connection type and manual override selected (see availability table, point 1).

body type	**configurations**	**resistance**
standard (black phosphated)	Any configuration	-
W7 (zinc-nickel finish)	+ standard coil (zinc-plated)	240 h
	+ W or ULW coil	240 h
	+ W or ULW coil + type C* manual override	600 h

9 - OVERALL AND MOUNTING DIMENSIONS FOR DC SOLENOID VALVES

dimensions in mm

DS3 - S*
DS3 - RK

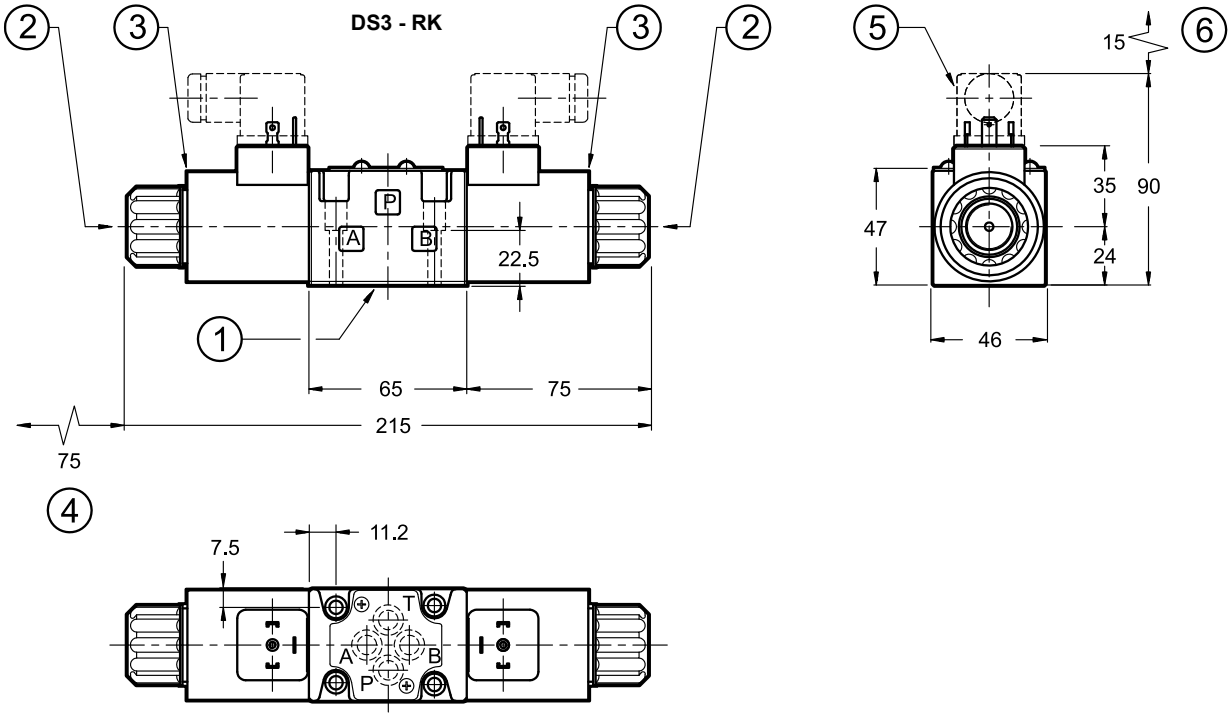

DS3-SA*, DS3-RSA*
DS3-TA, DS3-TA*

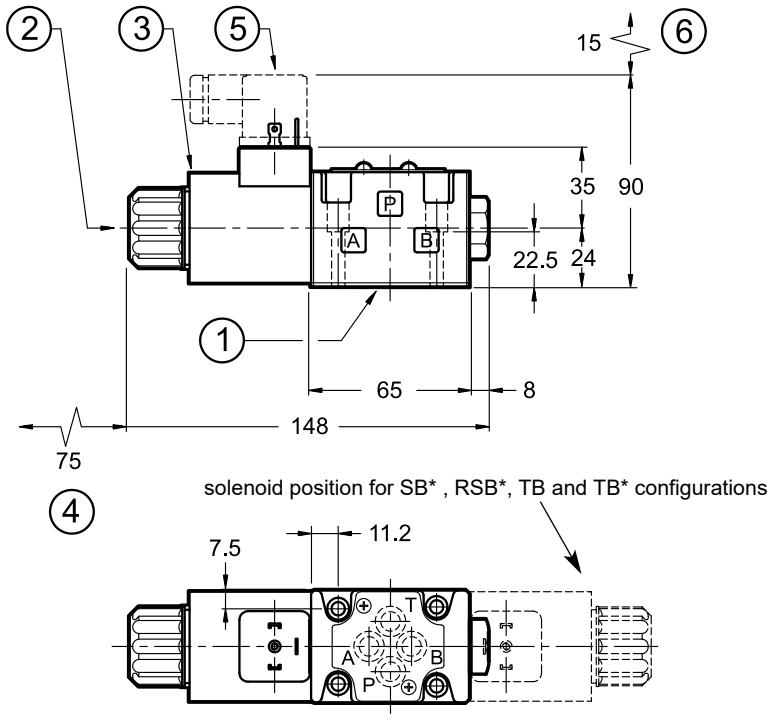

solenoid position for SB* , RSB*, TB and TB* configurations

Valve fastening: 4 SHC screws ISO 4762 M5x30	
Tightening torque: 5 Nm (A8.8)	
Threads of mounting holes: M5x10	

1	Mounting surface with sealing rings: 4 OR 2037 (9.25x1.78) - 90 shore
2	Standard manual override included in the solenoid tube
3	Coil (360° revolving)
4	Coil removal space
5	EN 175301-803 (ex DIN 43650) connector To be ordered separately. See cat. 49 000
6	Connector removal space
7	Locking ring: tightening torque 5 ±0.5 Nm

10 - OVERALL AND MOUNTING DIMENSIONS FOR AC SOLENOID VALVES

dimensions in mm

DS3 - S*
DS3 - RK

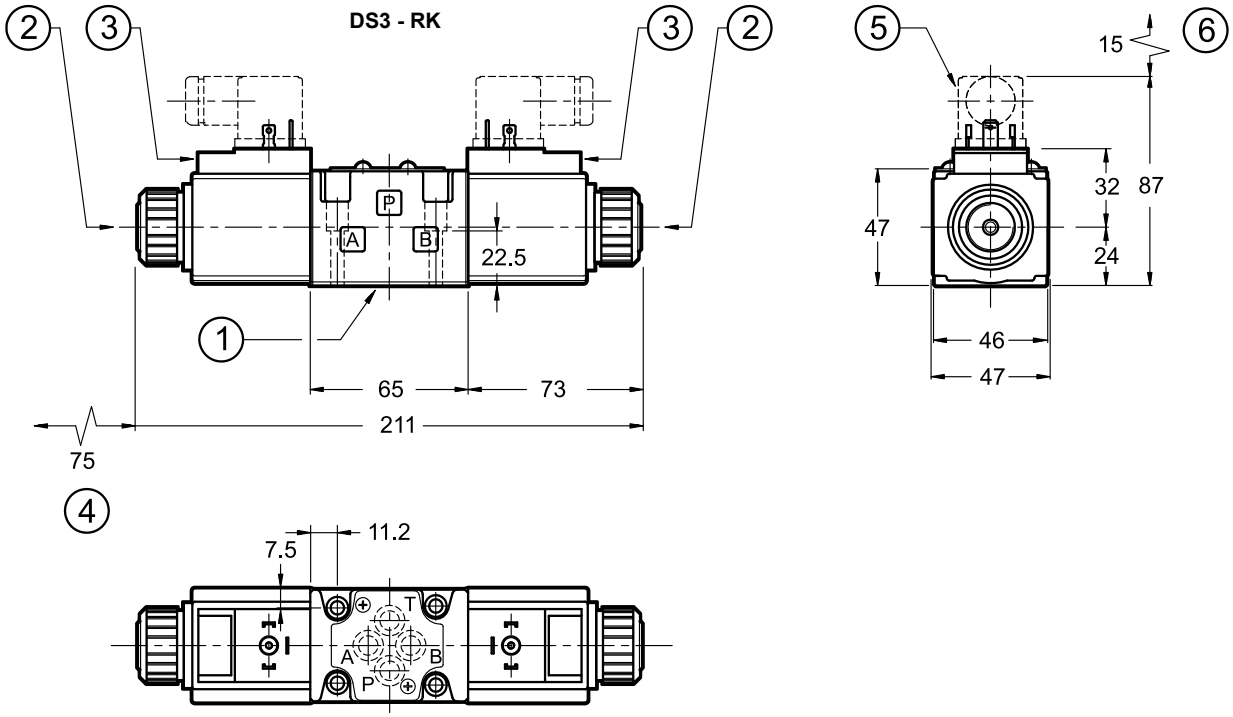

DS3-SA*, DS3-RSA*
DS3-TA, DS3-TA*

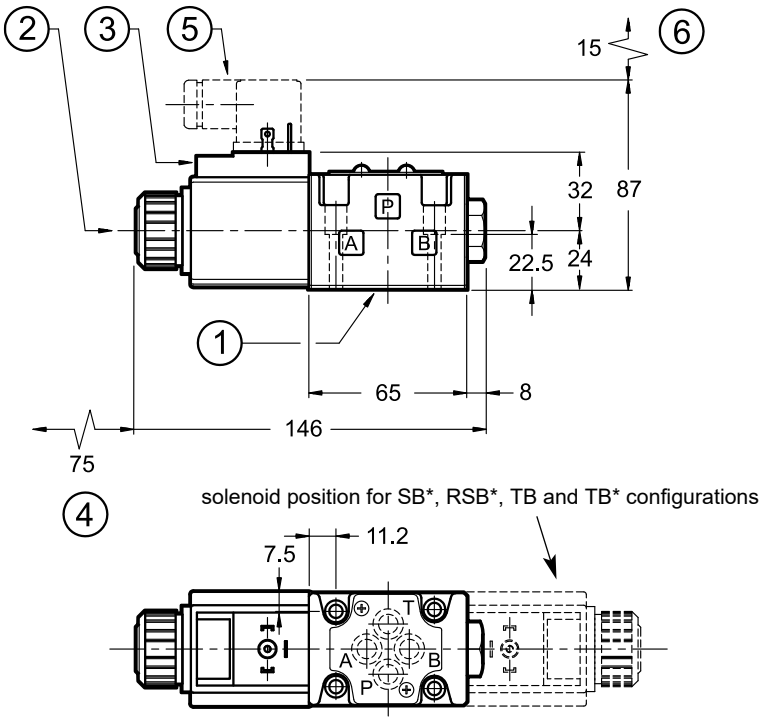

Valve fastening: 4 SHC screws ISO 4762 M5x30	
Tightening torque: 5 Nm (A8.8)	
Threads of mounting holes: M5x10	

1	Mounting surface with sealing rings: 4 OR 2037 (9.25x1.78) - 90 shore
2	Standard manual override included in the solenoid tube
3	Coil (90° revolving)
4	Coil removal space
5	EN 175301-803 (ex DIN 43650) connector To be ordered separately. See cat. 49 000
6	Connector removal space
7	Locking ring: tightening torque 5 ±0.5 Nm

11 - INSTALLATION

Configurations with centering and return springs may be mounted in any position; type RK valves - without springs and with mechanical detent - must be mounted with the longitudinal axis horizontal.

Valve fixing takes place by means of screws or tie rods, with the valve mounted on a lapped surface, with values of planarity and smoothness that are equal to or better than those specified by the relevant symbol.

If the minimum flatness and/or surface finish requirements are not met, fluid leakage may occur between the valve and the mounting surface.

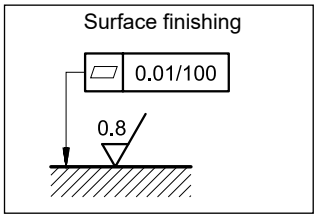

12 - ELECTRICAL CONNECTIONS

connection for EN 175301-803
(ex DIN 43650) connector
code **K1**
code **WK1**
code **ULWK1**

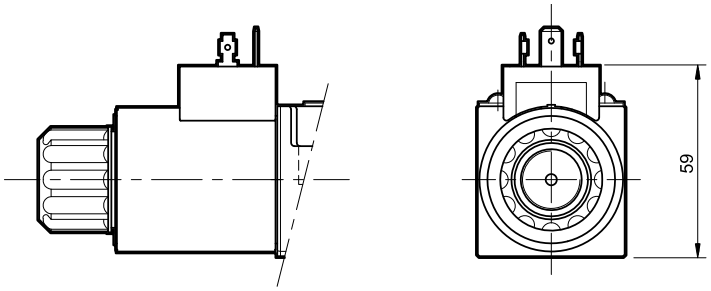

connection for AMP JUNIOR
connector
code **ULWK2**

connection for
DEUTSCH DT06-2S male connector
code **ULWK7**
code **WK7D** (with diode)

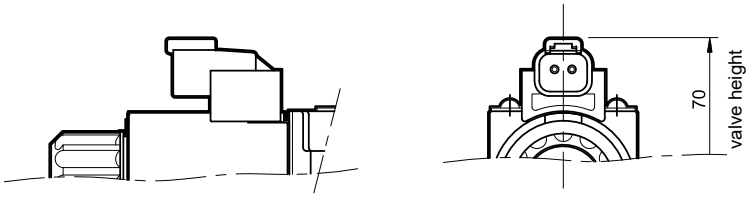

13 - ELECTRICAL CONNECTORS

Solenoid operated valves are delivered without connectors. Connectors type EN 175301-803 (ex DIN 43650) for K1 connections can be ordered separately. See catalogue 49 000.

14 - MANUAL OVERRIDES

14.1 - Manual override, boot protected

CM-DS3/11 - Version for DC solenoid valve

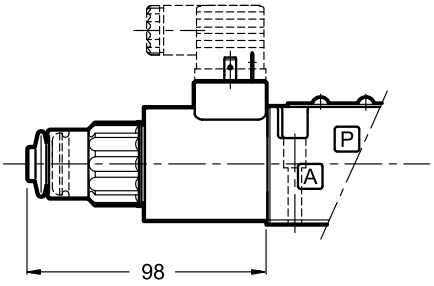

Code: 3401150006

Version for AC solenoid valve

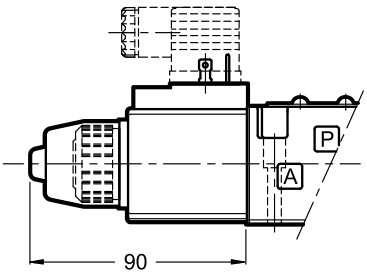

Code: 0269201

14.2 - CH-DS3/11 and CH1-DS3/10 Lever manual override (only for DC solenoid valve)

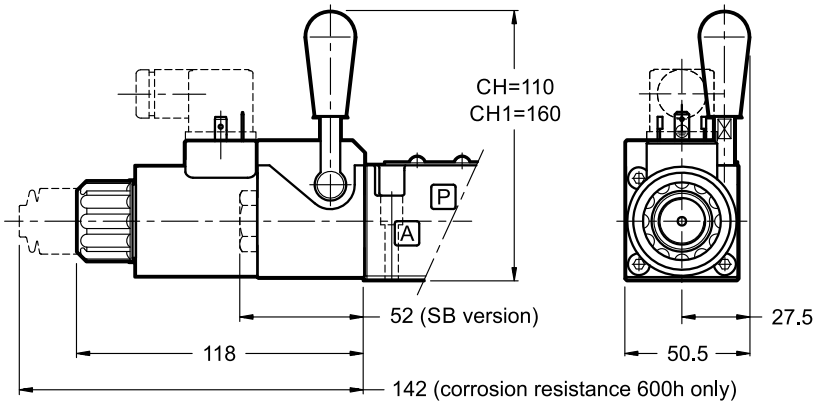

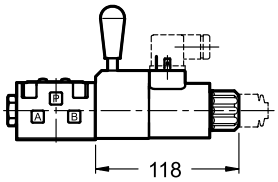

NOTES: The CH device is located on side A of the valve, except on DS3-TB valves.

600h corrosion-resistant valves include a solenoid tube cap.

14.3 - CP-DS3/10 Push manual override (only for DC solenoid valve)

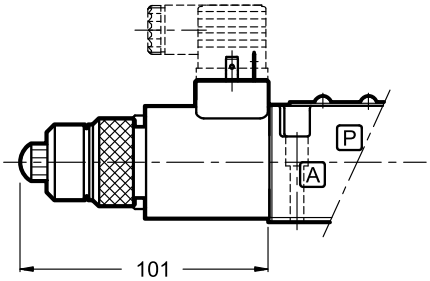

Code: 3401150005

14.4 - CK1-DS3/14 Knob manual override, turning (only for DC solenoid valve)

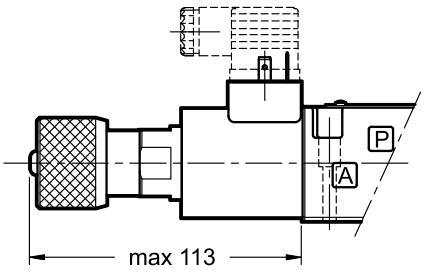

Code: 3401150031

14.5 - CPK-DS3/10 Push manual override with mechanical retention (only for DC solenoid valve)

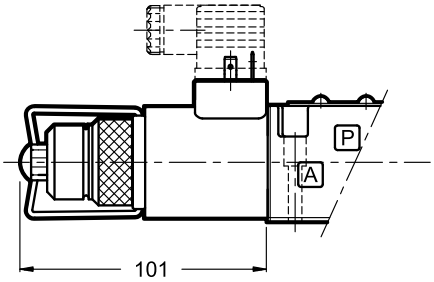

Code: 3401150004

14.6 - CK2-DS3/12 Push and twist manual override (only for DC solenoid valve)

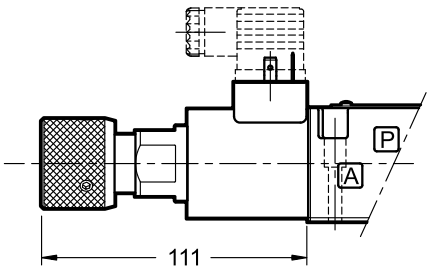

Code: 3401150026

15 - SOFT-SHIFT VERSION FOR DC VALVE

15.1 - Identification code

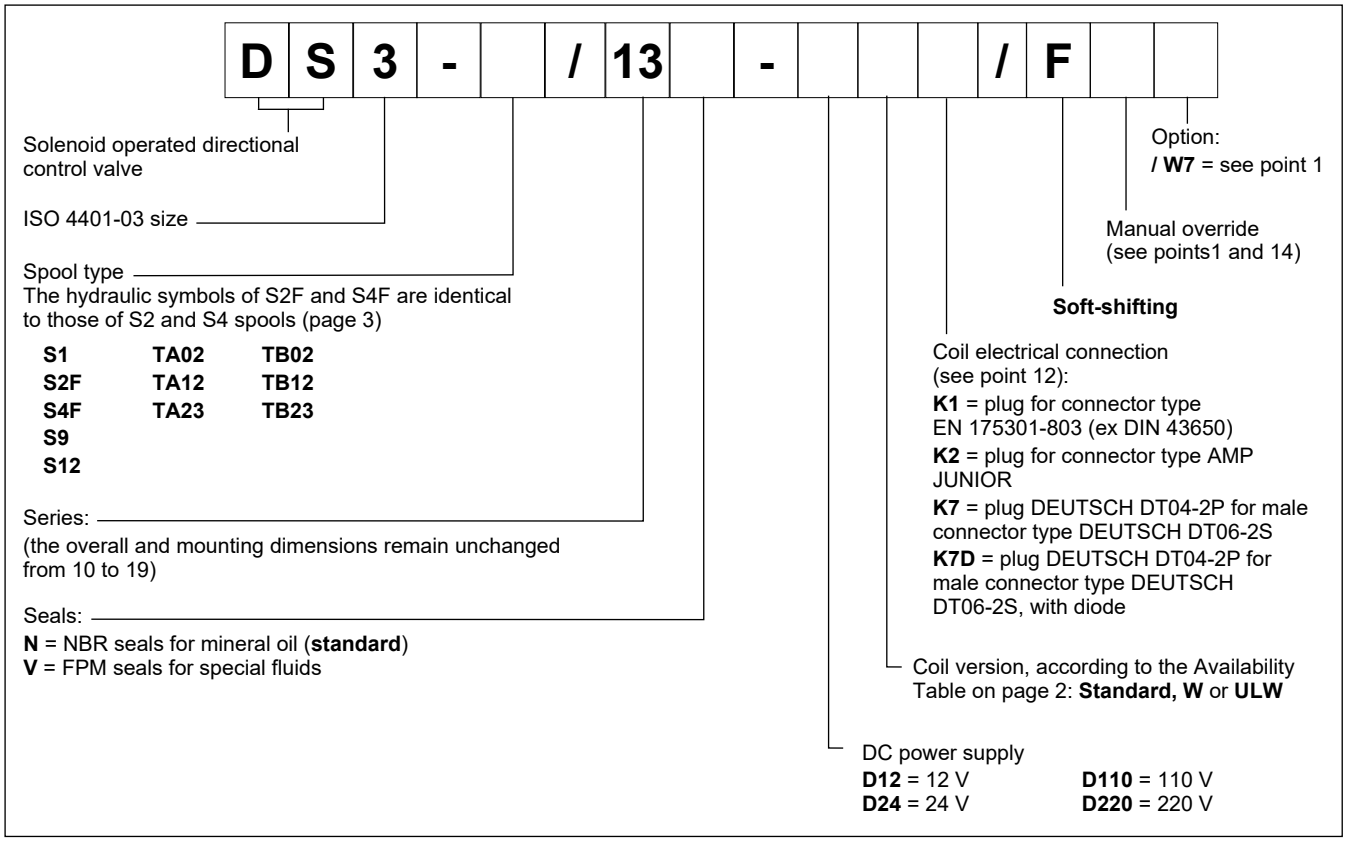

This version enables hydraulic actuators to perform a smooth start and stop by reducing the speed of movement of the valve spool.

In this version, the S9 spool must be used instead of the S3 type.

The diagram on the side shows the operating limits of the spools available in the soft-shifting version, while the table shows the switching times.

The values indicated are obtained according to ISO 6403 standard, with mineral oil viscosity 36 cSt at 50°C.

The shifting time and characteristics curves are influenced by the viscosity (and thus by the temperature) of the operating fluid. Moreover, times can vary according to the flow rate and operating pressure values of the valve.

For correct operation of the soft-shifting ensure the solenoid tubes are always filled with fluid. For this matter, we recommend to install a backpressure valve set at 1 ÷ 2 bar on T line.

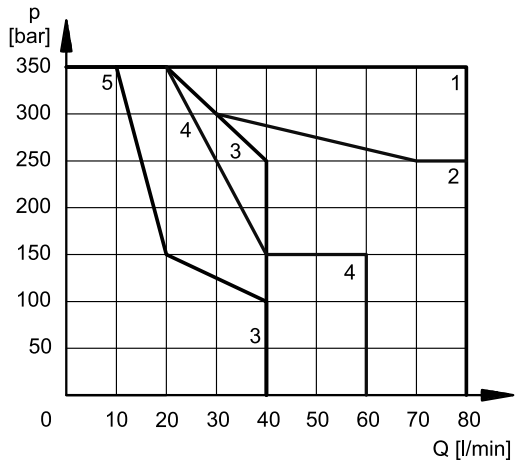

SPOOL	CURVE	TIMES [ms]	
		ENERGIZING	DE-ENERGIZING
S1, S12	1	350	200 ÷ 300
S2F	2	200	300 ÷ 400
S4F	3	350	150 ÷ 300
S9	1	400	200 ÷ 300
TA02, TB02	4	180	200 ÷ 300
TA12, TB12	5	180	200 ÷ 300
TA23, TB23		300	200 ÷ 300

16 - VERSION WITH FIXING INTERCHANGEABLE WITH 4WE6*6X REXROTH

16.1 - Identification code

D	S	3	R	-		/	11		-			/		

Directional valve, solenoid operated

ISO 4401-03 size

Fastening screws interchangeable with Rexroth 4WE6*6X valve.

Spool type (see point 3)

S*	**RSA***	**TA**	**RK**
SA*	**RSB***	**TB**	
SB*		**TA***	
		TB*	

Series:
(the overall and mounting dimensions remain unchanged from 10 to 19)

Complete the indentification code configuration as for in point 1.

16.2 - Overall and mounting dimensions for DC solenoid valves

dimensions in mm

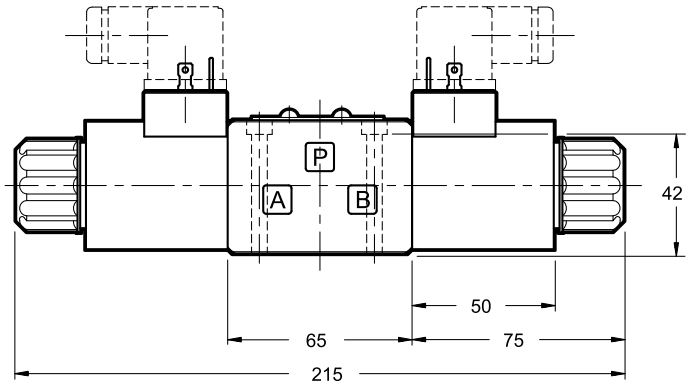

Please refer to the standard valve at point 9 for non-quoted dimensions.

Valve fastening: 4 SHC screws ISO 4762 M5x50
Tightening torque: 5 Nm (A8.8)
Threads of mounting holes: M5x10

16.3 - Overall and mounting dimensions for AC solenoid valves

dimensions in mm

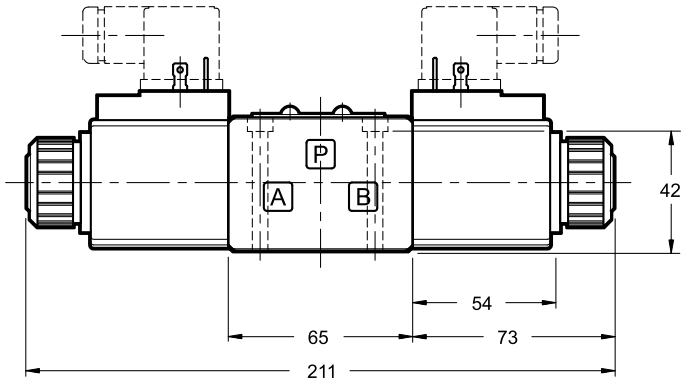

Please refer to the standard valve at point 10 for non-quoted dimensions.

Valve fastening: 4 SHC screws ISO 4762 M5x50
Tightening torque: 5 Nm (A8.8)
Threads of mounting holes: M5x10

17 - PORT RESTRICTORS

Port restrictors are recommended when flow variations during switching exceed the valve's performance limits, or when circuit dampening is required.

Port restrictor can be ordered separately using the part numbers shown at left.

Ø (mm)	part number
blank	**0144162**
0.6	**0144163**
0.8	**0144033**
1	**0144034**

Ø (mm)	part number
1.2	**0144035**
1.5	**0144036**
1.8	**0144164**
2	**0144165**

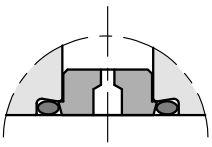

18 - SPARE PARTS FOR DC SOLENOID VALVE

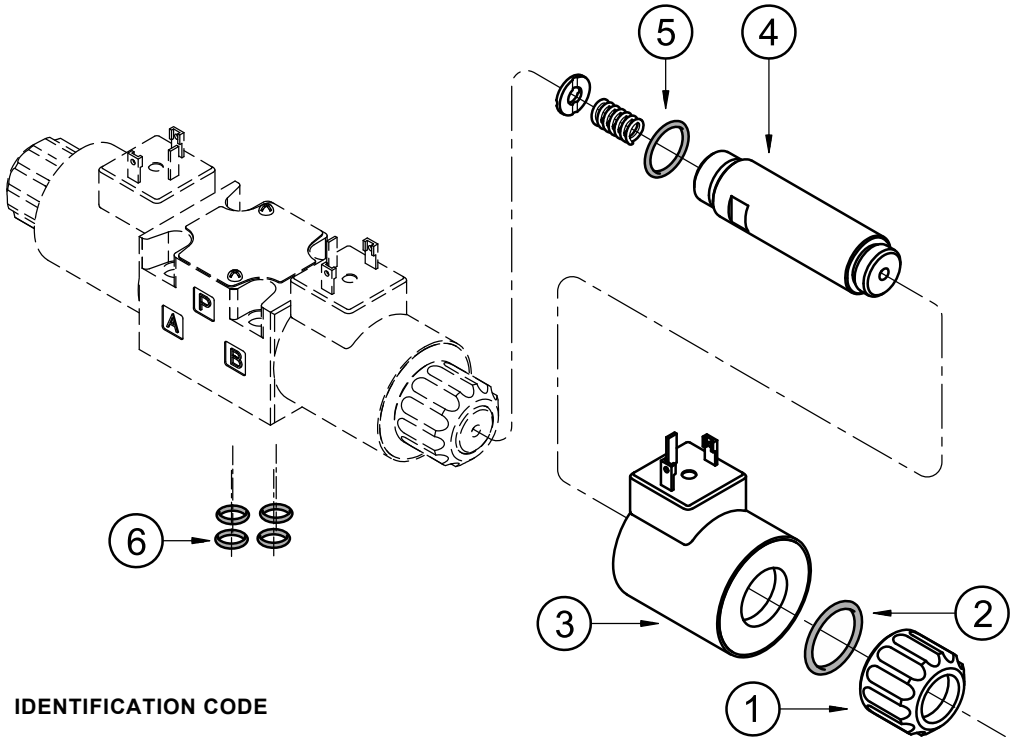

DC COILS IDENTIFICATION CODE

C	22S3	-				/		

Supply voltage

D12 = 12 V
D14 = 14 V
D24 = 24 V
D26 = 26.4 V
D48 = 48 V
D110 = 110 V
D125 = 125 V
D220 = 220 V

Coil version
(see availability table on page 2):
Omit for standard zinc-plated version
W = corrosion-protected
ULW = UL Recognized and corrosion-protected

Coil electrical connection (see point 12):
K1 = plug for connector EN 175301-803 (ex DIN 43650)
K2 = plug for connector AMP JUNIOR
K7 = plug DEUTSCH DT04-2P, for male connector type DEUTSCH DT06-2S.
K7D = plug DEUTSCH DT04-2P, for male connector type DEUTSCH DT06-2S, with diode.

Series no.:
11 = for D12 and D24 K1 standard
20 = for W and ULW coils types

Only for ULW coils:
A = internal code

1	Coil locking ring with seal included cod. 0119412 Tightening torque 5 ±0.5 Nm
2	ORM type 0220-20 (22x2) - 70 Shore
3	Coil (see identification code)
4	Solenoid tube for standard version: **NOTE:** OR n°5 included
5	OR type 2062 (15.6x1.78) - 70 Shore
6	4 OR type 2037 (9.25x1.78) - 90 Shore

SEALS KIT

The codes include the O-Ring No. 2, 5 and 6.

Cod. 1985406 NBR seals
Cod. 1985410 FPM (viton) seals

19 - SPARE PARTS FOR AC SOLENOID VALVE

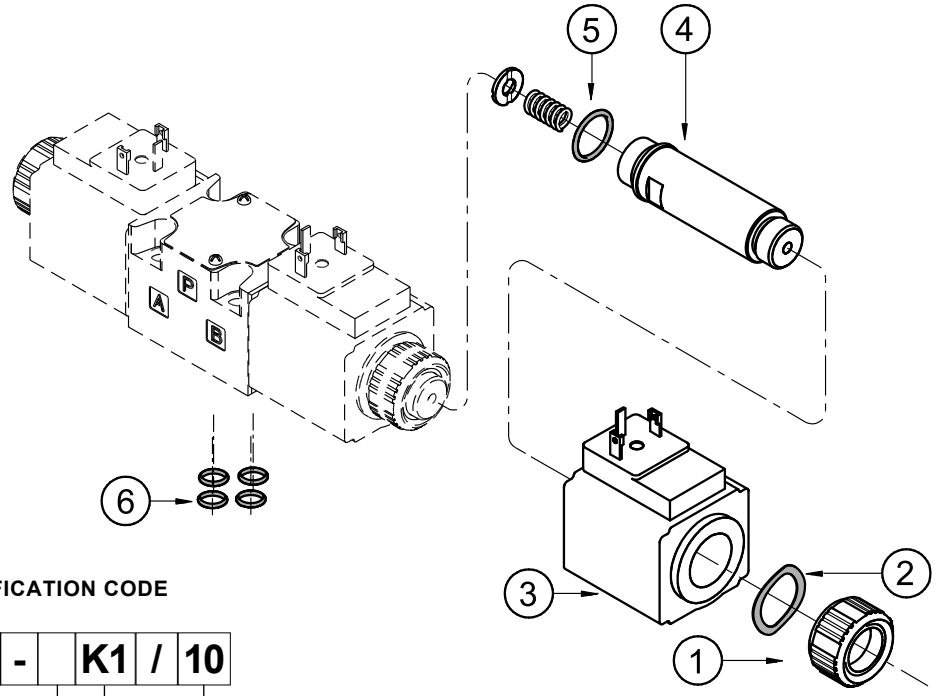

AC COILS IDENTIFICATION CODE

C	20.6S3	-		K1	/	10

Supply voltage
A24 = 24 V - 50 Hz
A48 = 48 V - 50 Hz
A100 = 100 V - 50 Hz
100 V - 60 Hz
A110 = 110 V - 50 Hz
120 V - 60 Hz
A230 = 230 V - 50 Hz
240 V - 60 Hz
F110 = 110 V - 60 Hz
F220 = 220 V - 60 Hz

Plug for connector type
EN 175301-803
(ex DIN 43650)

Series no.

1	Coil locking ring cod. 0119333 Tightening torque 5 ±0.5 Nm
2	Snap ring cod. 0550483
3	Coil (see identification code on the side)
4	Solenoid tube : **NOTE**: OR n° 5 included
5	OR type 2062 (15.6x1.78) - 70 Shore
6	N. 4 OR type 2037 (9.25x1.78) - 90 Shore

SEALS KIT

The codes include the OR No. 5 and 6.

Cod. 1985406 NBR seals
Cod. 1985410 FPM (viton) seals

20 - SUBPLATES

(see catalogue 51 000)

Type PMMD-AI3G with rear ports 3/8” BSP
Type PMMD-AL3G with side ports 3/8” BSP

DUPLOMATIC MOTION SOLUTIONS
a member of DAIKIN group

DUPLOMATIC MS Spa
via Mario Re Depaolini, 24 | 20015 Parabiago (MI) | Italy
T +39 0331 895111 | E vendite.ita@duplomatic.com | sales.exp@duplomatic.com
duplomaticmotionsolutions.com

REPRODUCTION IS FORBIDDEN. THE COMPANY RESERVES THE RIGHT TO APPLY ANY MODIFICATIONS.