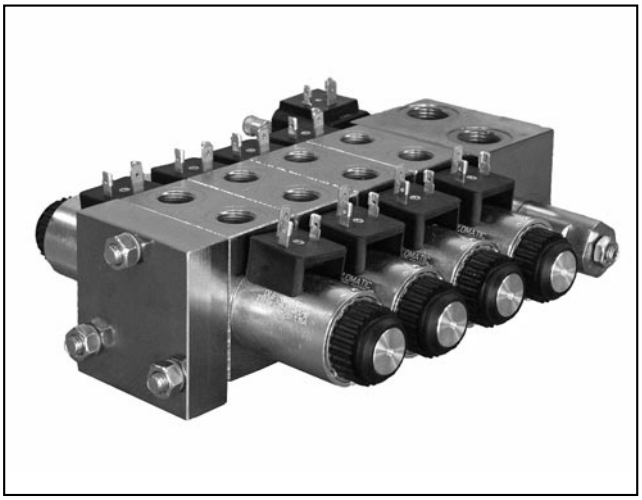

BD*
STACKABLE DIRECTIONAL CONTROL VALVE
SERIES 10

p max (see table of performances)
Q max (see table of performances)

OPERATING PRINCIPLE

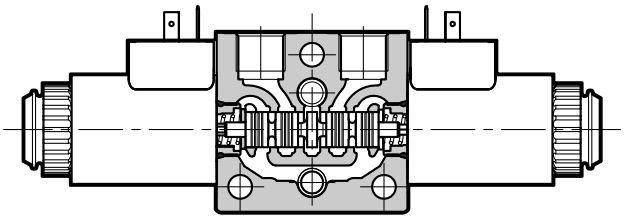

— BDL, BDM and BDS are stacked valve assemblies, very well-rounded thanks to their modular design.

— Elements have been designed to be assembled in parallel connection, mounting up to 10 stackable valves. The same elements allow to create series circuits by inserting plugs in order to divert the oil path.

— Elements specifically designed for BD*2 series circuits complete the BD* range.

— BD* assemblies are suitable for compact applications in the mobile and in mini-power pack industries.

— Directional valve elements are available in two thicknesses, with working ports 3/8” BSP, 1/2” BSP, SAE–06 and SAE–08 threaded.

PERFORMANCES
(obtained with mineral oil with viscosity of 36 cSt at 50°C)

		BDL	BDM	BDS
Maximum operating pressure: - P-A-B ports - T / T1 ports	bar	280 280	320 250	320 250
Maximum flowrate: - parallel - series	l/min	40 40	50 40	60 50
Pressure drops Δp - Q	see point 3			
Electrical characteristics	see point 6			
Operating limits	see point 4			
Electrical connections	see point 7			
Ambient temperature range	°C	-20 / +50		
Fluid temperature range	°C	-20 / +80		
Fluid viscosity range	cSt	10 ÷ 400		
Fluid contamination degree	According to ISO 4406:1999 class 20/18/15			
Recommended viscosity	cSt	25		
Mass (BDS3-B38-S)	kg	1,57	1,73	2,1
Surface treatment of inlet and outlet elements and valves bodies	zinc-nickel			

HYDRAULIC SYMBOL

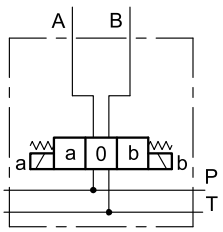

1 - IDENTIFICATION CODES OF SEPARATE ELEMENTS

Here below are shown the identification codes for the separate elements of the stackable valve. Parallel circuits can be assembled with these elements. The same elements allow to create series circuits by inserting plugs in order to divert the oil path.

1.1 - Directional valve element

BD | | | - | | - | | / 10 | | - | | | / |

Stack directional valve element, on-off

Solenoid tube (mm):
L = 14
M = 19
S = 22 (only size 3)

Size :
2 = thickness 38 mm
3 = thickness 46 mm

Ports:
B38 = 3/8” BSP
B12 = 1/2” BSP (only for size 3)
S06 = 9/16” 18 UNF (SAE 06)
S08 = 3/4” 16 UNF (SAE 08) (only for size 3)

Spool type
(see point 1.2)

Series no.
(the overall and mounting dimensions remain unchanged from 10 to 19)

Seals:
N = NBR seals for mineral oil (**standard**)
V = FPM seals for special fluids

Manual override (see point 10.6 - 10.8):
for **BDL**:
omit for manual override boot protected integrated in the coil locking ring (**standard**)
for **BDM** and **BDS:**
omit for pin manual override integrated in the tube (**standard**).
CM = manual override boot protected
for **BDL**, **BDM** and **BDS**
CK1 = turning knob override
CHL = light duty hand lever. p max 50 bar in T line (not available for series circuits)

Coil electrical connection:
See below for availability, see points 6 and 7 for details
K1 = plug for connector type EN 175301-803 (ex DIN 43650) (**standard**)
K7, WK7, WK7D = plug DEUTSCH DT04-2P for male connector type DEUTSCH DT06-2S

The electrical connection K2 (AMP JUNIOR type) is available upon request

Coil type:
DC coils
D12 = 12 V
D24 = 24 V
D28 = 28 V
D48 = 48 V
D00 = valve without coil supplied with locking ring

NOTE: Variants are available. See point 10.1

Available coils

	BDL			BDM			BDS					
	K1	K2	K7	K1	K2	K7	K1	K2	K7	WK1	WK7	WK7D
D12	■	■	■	■	■	■	■	□	■	■	■	■
D24	■	■	■	■	■	■	■	□	■	■	■	■
D28	■	-	-	-	-	-	■	-	-	-	-	-
D48	■	-	-	-	-	-	■	-	-	-	-	-

■ available
□ upon request

The letter ‘W’ identifies coils with an high IP degree. This IP degree is reached by specific surface treatments and / or design adaptations, such as the boot protected manual override or other manual overrides to protect the solenoid tube.

NOTE: A galvanic surface treatment zinc-nickel is applied to body elements and plates, so BDS valves with WK* type coils and the BDL type valves suitable to withstand a salt spray exposure time of **600** hours. BDS valves with K* type coils and BDM valves are suitable to withstand a salt spray exposure time of **240** hours (test carried out according to the UNI EN ISO 9227 and assessment test carried out according to UNI EN ISO 10289).

1.2 - Available spools

Type **S**:
2 solenoids - 3 positions
spring centreing

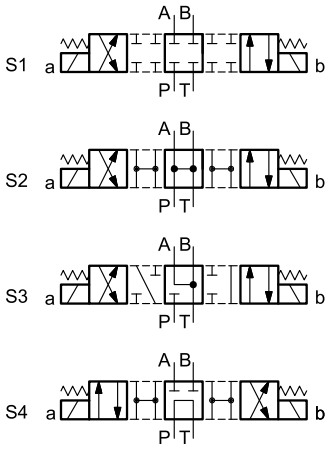

Type **SA***: 1 solenoid side A
2 positions (central + external)
spring centreing

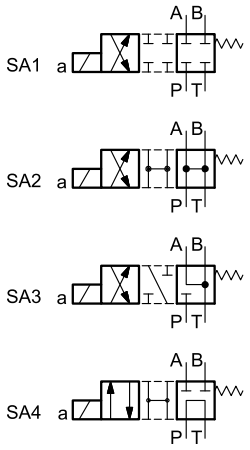

Type **SB***: 1 solenoid side B
2 positions (central + external)
spring centreing

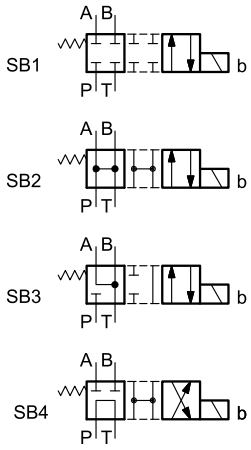

Type **TA***:
1 solenoid side A
2 external positions
with return spring

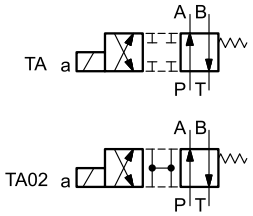

Type **TB***:
1 solenoid side B
2 external positions
with return spring

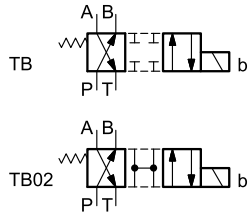

NOTE 1: BDS valves use spools of DS3 solenoid valve. Please refer to catalogue 41 150 for additional spools.

NOTE 2: Further spools for BDL and BDM are available upon request. Please contact our technical department.

1.3 - Inlet element without pressure relief valve

BD 3 - S - P / 10

Stackable

Nominal size

Ports size:
B12 = 1/2” BSP (**standard**)

Material:
S = Steel (**standard**)

Parallel inlet element

Series no.:
(the overall and mounting dimensions remain unchanged from 10 to 19)

Seals:
N = NBR seals for mineral oil (**standard**)
V = FPM seals for special fluids

1.4 - Inlet element with pressure relief valve

BD 3 - S - P / 10

Stackable

Nominal size

Ports size:
B12 = 1/2” BSP (**standard**)

Material:
S = Steel (**standard**)

Parallel inlet element

Pressure adjustment range:
140 = up to 140 bar
210 = up to 210 bar
320 = up to 320 bar

Series no.:
(the overall and mounting dimensions remain unchanged from 10 to 19)

Seals:
N = NBR seals for mineral oil (**standard**)
V = FPM seals for special fluids

1.5 - Inlet element with both pressure control and unloading valves

BD 3 - S - PK / 11 - /

Stackable

Nominal size

Ports size:
B12 = 1/2” BSP (**standard**)

Material:
S = Steel (**standard**)

Parallel inlet element with both pressure control and unloading valves

Pressure adjustment range:
140 = up to 140 bar
210 = up to 210 bar
320 = up to 320 bar

Series no.:
(the overall and mounting dimensions remain unchanged from 10 to 19)

Seals:
N = NBR seals for mineral oil (**standard**)
V = FPM seals for special fluids

Coil type of the unloading valve:
DC coil
D12 = 12 V
D24 = 24 V
D28 = 28 V

Coil electrical connection of the unloading valve:
K1 = plug for connector type EN 175301-803 (ex DIN 43650) (**standard**)
For **D12** and **D24** coils only:
K7 = plug DEUTSCH DT04-2P for male connector type DEUTSCH DT06-2S
K2 plug for connector type AMP JUNIOR upon request.

Manual override of the unloading valve:
CS = screw
CP = push

1.6 - Inlet element for flow control valve

BD	3	-	B38	S	-	P			-	Q	/	10		-			/	

Stackable

Nominal size

Ports size:
3/8” BSP (**standard**)

Material:
S = Steel (**standard**)

Parallel inlet element with pressure relief valve

K = with unloading valve. Omit if not required.

Pressure relief valve adj. range:
140 = up to 140 bar
210 = up to 210 bar
320 = up to 320 bar

Mounting interface ISO 6263-03 style for flow control valve
(to be ordered separately, see catalogue 82220).

Series no.:
(the overall and mounting dimensions remain unchanged from 10 to 19)

Seals:
N = NBR seals for mineral oil (**standard**)
V = FPM seals for special fluids

Manual override of the unloading valve:
CPK = push and twist
CP = push

Coil electrical connection of the unloading valve:
K1 = plug for connector type EN 175301-803 (ex DIN 43650) (**standard**)
For **D12** and **D24** coils only:
K7 = plug DEUTSCH DT04-2P for male connector type DEUTSCH DT06-2S
K2 plug for connector type AMP JUNIOR upon request.

Coil type of the unloading valve:
DC coil
D12 = 12 V
D24 = 24 V
D28 = 28 V

NOTE: if no unloading valve is needed, the identification code ends with seals digit.
Example: BD3-B38S-P140-Q/10N

1.7 - Outlet elements

BD	3	-		S	-	R		/	10

Stackable

Nominal size

Ports size:
Omit for blind plate
B38 = 3/8” BSP

Material:
S = Steel (**standard**)

Outlet element (rear)

Series no.:
(the overall and mounting dimensions remain unchanged from 10 to 19)

Outlet port:
00 = blind plate
(do not use in stack assemblies for series connection)
01 = outlet port P
02 = outlet port T
03 = outlet port both for P and T

2 - HYDRAULIC FLUIDS

Use mineral oil-based hydraulic fluids HL or HM type, according to ISO 6743-4. For these fluids, use NBR seals (code N). For fluids HFDR type (phosphate esters) use FPM seals (code V). For the use of other kinds of fluid such as HFA, HFB, HFC, please consult our technical department.

Using fluids at temperatures higher than 80 °C causes a faster degradation of the fluid and of the seals characteristics.The fluid must be preserved in its physical and chemical characteristics.

3 - CHARACTERISTIC CURVES

(values obtained with viscosity 36 cSt at 50 °C)

3.1 - BDL

Values obtained with one element BDL2-B38A (thickness 38, ports 3/8” BSP)

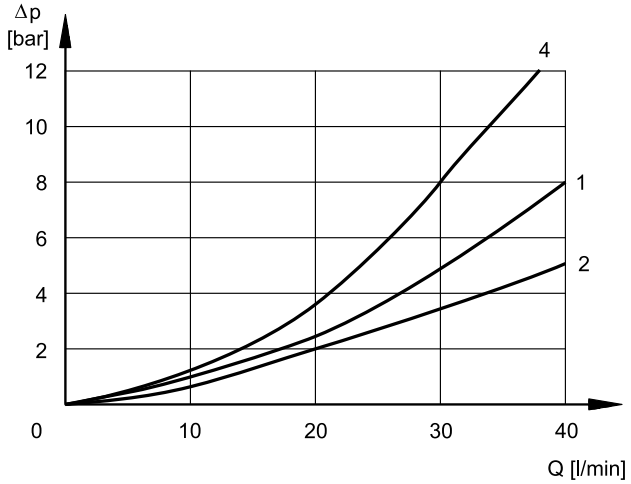

SPOOL TYPE	FLOW DIRECTION				
	P→A	P→B	A→T	B→T	P→T
	CURVES ON GRAPHS				
S1, SA1, SB1	1	1	1	1	-
S2, SA2, SB2	2	2	2	2	2
S3, SA3, SB3	1	1	2	2	-
S4, SA4, SB4	4	4	4	4	1
TA, TB	1	1	1	1	-
TA02, TB02	1	1	1	1	-

3.2 - BDM

Values obtained with one element BDM3-B38 (thickness 46, ports 3/8” BSP)

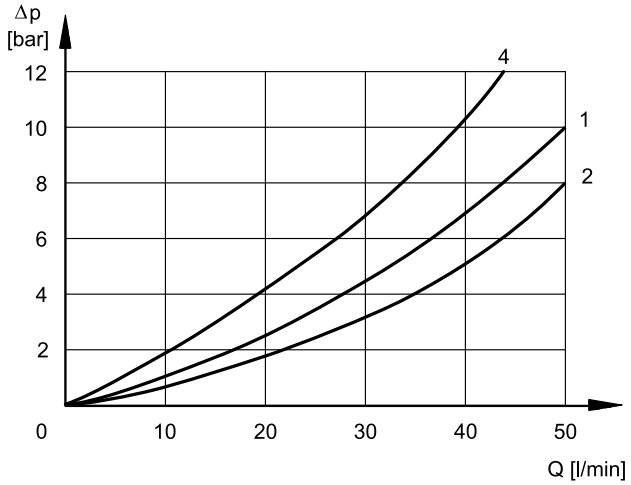

SPOOL TYPE	FLOW DIRECTION				
	P→A	P→B	A→T	B→T	P→T
	CURVES ON GRAPHS				
S1, SA1, SB1	1	1	1	1	-
S2, SA2, SB2	2	2	2	2	2
S3, SA3, SB3	1	1	2	2	-
S4, SA4, SB4	4	4	4	4	1
TA, TB	2	2	2	2	-
TA02, TB02	1	1	1	1	-

3.3 - BDS

Values obtained with one element BDS3-B12 (thickness 46, ports 1/2” BSP)

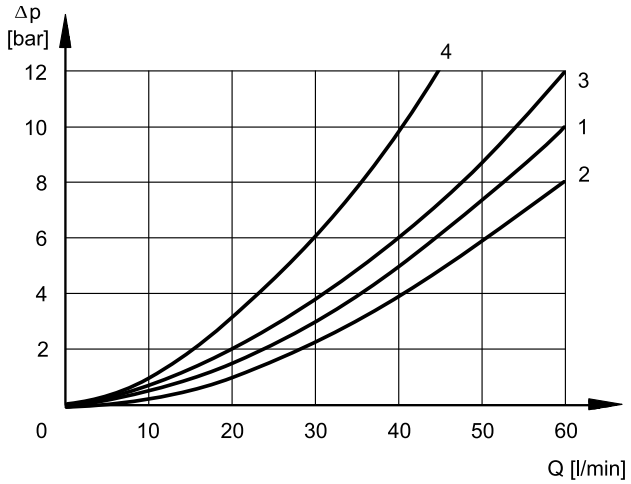

SPOOL TYPE	FLOW DIRECTION				
	P→A	P→B	A→T	B→T	P→T
	CURVES ON GRAPHS				
S1, SA1, SB1	1	1	3	3	-
S2, SA2, SB2	2	2	1	1	2
S3, SA3, SB3	3	3	2	2	-
S4, SA4, SB4	4	4	4	4	1
TA, TB	3	3	3	3	-
TA02, TB02					

4 - OPERATING LIMITS

The curves define the flow rate operating fields according to the valve pressure of the different versions. The values have been obtained according to ISO 6403 norm with solenoids at rated temperature and supplied with voltage equal to 90% of the nominal voltage.

Values obtained with mineral oil, viscosity 36 cSt, temperature 50 °C and filtration according to ISO 4406:1999 class 18/16/13.

4.1 - BDL

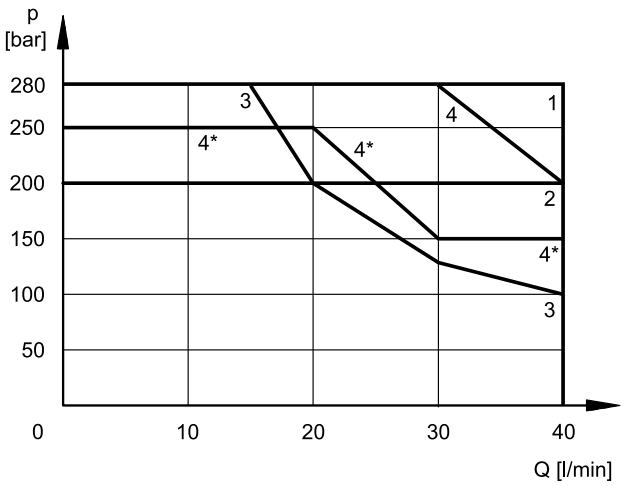

SPOOL TYPE	
S1, SA1, SB1	1
S2, SA2, SB2	2
S3, SA3, SB3	3
S4, SA4, SB4	4
S4, SA4, SB4 reverse flow	4*
TA, TB	4
TA02, TB02	1

4.2 - BDM

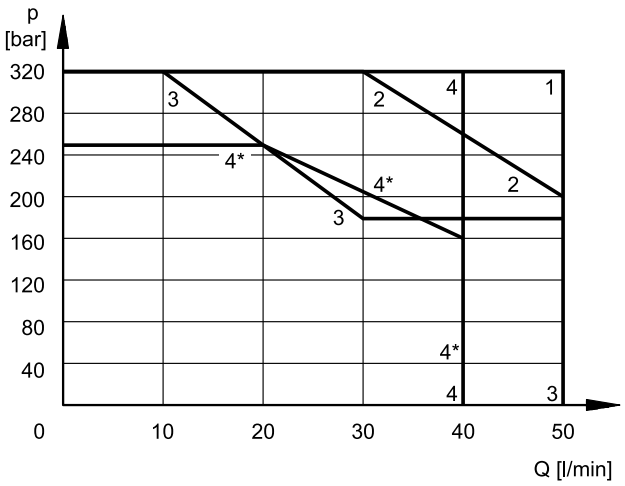

SPOOL TYPE	
S1, SA1, SB1	1
S2, SA2, SB2	2
S3, SA3, SB3	3
S4, SA4, SB4	4
S4, SA4, SB4 reverse flow	4*
TA, TB	2
TA02, TB02	1

4.3 - BDS

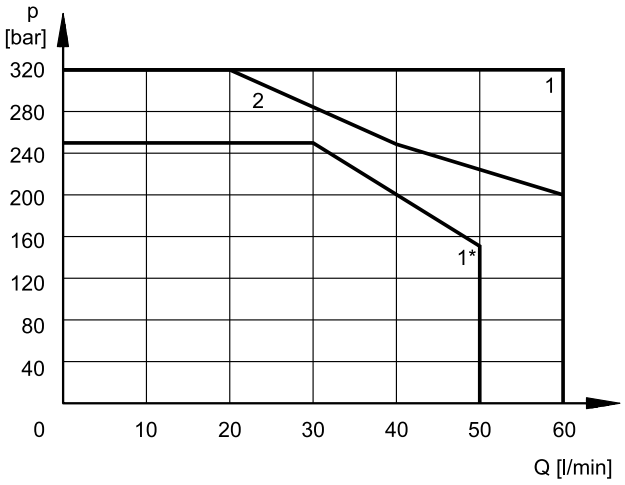

SPOOL TYPE	
S1, SA1, SB1	1
S2, SA2, SB2	1
S3, SA3, SB3	2
S4, SA4, SB4	1
S4, SA4, SB4 reverse flow	1*
TA, TB	1
TA02, TB02	1

NOTE: The reverse flow condition occurs in series circuits made with elements for parallel connection, in even-position elements only.

See scheme at point 13.2

5 - SWITCHING TIMES

Values obtained according to ISO 6403, with mineral oil with viscosity 36 cSt at 50°C.

TIMES [ms] (±10%)	ENERGIZING	DE-ENERGIZING
BDL	25 ÷ 75	15 ÷ 25
BDM	25 ÷ 75	15 ÷ 25
BDS	25 ÷ 75	15 ÷ 25

6 - ELECTRICAL FEATURES

6.1 - Solenoids

These are essentially made up of two parts: tube and coil. The tube is threaded into the valve body and includes the armature that moves immersed in oil, without wear. The inner part, in contact with the oil in the return line, ensures heat dissipation. The coil is fastened to the tube by a threaded ring, and can be rotated to suit the available space.

6.2 - Protection from atmospheric agents IEC 60529

The IP protection degree is guaranteed only with both valve and connectors of an equivalent IP degree, correctly connected and installed.

The protection degree IP69K is not taken into account in IEC 60529 but it is included in ISO 20653.

SUPPLY VOLTAGE FLUCTUATION	± 10% Vnom
MAX SWITCH ON FREQUENCY	10.000 ins/hr
DUTY CYCLE	100%
ELECTROMAGNETIC COMPATIBILITY (EMC)	In compliance with 2014/30/EU
LOW VOLTAGE	In compliance with 2014/35/EU
CLASS OF PROTECTION coil insulation (VDE 0580) impregnation	 class H class F

6.3 - BDL (solenoid tube Ø14)

IP degrees

protection referred to	electrical connection / whole valve				
	IP65	IP66	IP67	IP68	IP69 IP69K
K1 EN 175301-803	x	x			
K7 DEUTSCH DT04 male	x		x	x	x

Current and absorbed power
(values ±5 %)

	Resistance 20°C [Ω]	Absorbed current [A]	Absorbed power [W]
D12	5,4	2,2	26,5
D24	20,7	1,16	27,8
D28	27,5	1,02	28,5
D48	82	0,58	28

NOTE: It is possible to order the coils spare.
See catalogue 41 211 at point 14 - “Identification code for DC coils”.

6.4 - BDM (solenoid tube Ø19)

IP degrees

protection referred to	electrical connection whole valve
	IP65
K1 EN 175301-803	x
K7 DEUTSCH DT04 male	x

Current and absorbed power
(values ±10 %)

	Resistance 20°C [Ω]	Absorbed current [A]	Absorbed power [W]
D12	4.98	2.41	28.9
D24	21	1.15	28

NOTE: It is possible to order the coils spare.
See catalogue 41 110 at point 7.2.

6.5 - BDS (solenoid tube Ø22)

Coils with letter 'W' feature a zinc-nickel surface treatment, that makes them resistant to exposure to the salt spray for 600 hours (test performed according to UNI EN ISO 9227 and assessment test performed according to UNI EN ISO 10289).

The WK7D coils include a suppressor diode of pulses for protection from voltage peaks during switching. During the switching the diode significantly reduces the energy released by the winding, by limiting the voltage to 31.4V in the D12 coils and to 58.9 V in the D24 coils.

IP degrees

protection referred to	electrical connection					whole valve				
	IP65	IP66	IP67	IP68	IP69 IP69K	IP65	IP66	IP67	IP68	IP69 IP69K
K1 EN 175301-803 (ex DIN 43650)	x					x				
WK1 EN 175301-803 (ex DIN 43650)	x	x				x	x			
K7 DEUTSCH DT04 male	x		x			x				
WK7 / **WK7D** DEUTSCH DT04 male	x	x	x	x	x	x	x	x	x	x

Current and absorbed power
(values ±10 %)

	Resistance at 20°C [Ω]	Absorbed current [A]	Absorbed power [W]
D12	4.4	2.72	32.7
D24	18.6	1.29	31
D28	26	1.11	31
D48	78.6	0.61	29.5

NOTE: It is possible to order the coils spare.
See catalogue 41 150 at point 19 - "Identification code for DC coils".

6.6 - Unloading valve, solenoid operated (inlet plates)

Current and absorbed power
(values ±10 %)

BD3-B38S-**- Q/10**

	Resistance 20°C [Ω]	Absorbed current [A]	Absorbed power [W]
D12	7	1.2	20.5
D24	28	0.6	20.5

BD3-B12S-PK*/11*

	Resistance 20°C [Ω]	Absorbed current [A]	Absorbed power [W]]
D12	7.2	1.67	20
D24	28.8	0.83	20

ELECTROMAGNETIC COMPATIBILITY (EMC)	In compliance with 2014/30/EU
LOW VOLTAGE	In compliance with 2014/35/EU
CLASS OF PROTECTION atmospheric agents (EN 60529) coil insulation (VDE 0580) impregnation	 IP65 class H class H

7 - ELECTRICAL CONNECTIONS

7.1 - BDL

connection for EN 175301-803
(ex DIN 43650) connector
code **K1 (standard)**

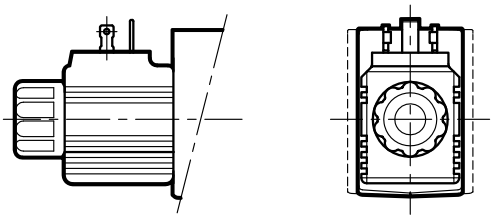

DEUTSCH DT04-2P connection for DEUTSCH
DT06-2S male connector
code **K7**

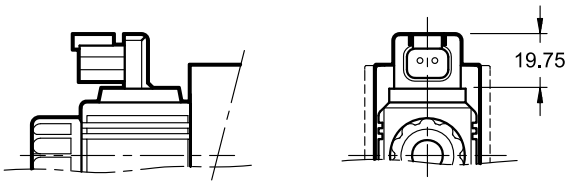

7.2 - BDM

connection for EN 175301-803
(ex DIN 43650) connector
code **K1 (standard)**

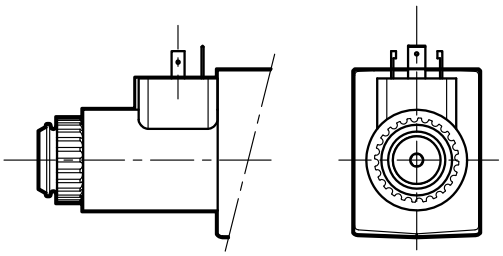

DEUTSCH DT04-2P connection for DEUTSCH
DT06-2S male connector
code **K7**

7.3 - BDS

connection for EN 175301-803 (ex DIN 43650) connector
code **K1** (**standard**)
code **WK1** (W7 version only)

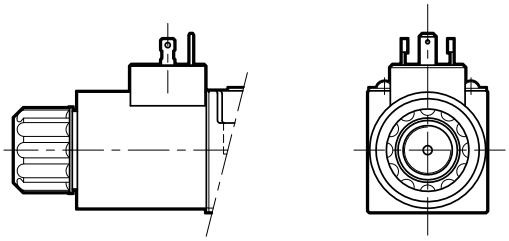

connection for DEUTSCH DT06-2S male connector
code **K7**

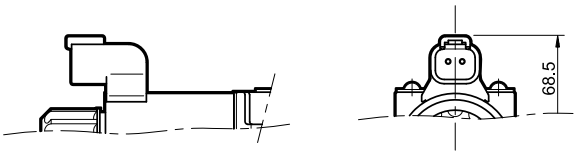

connection for DEUTSCH DT06-2S male connector
code **WK7** (W7 version only)
code **WK7D** (W7 version only - coil with diode)

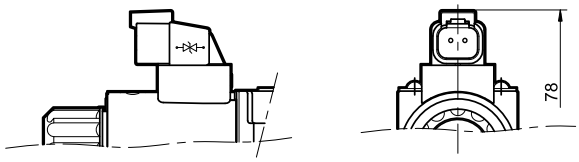

8 - ELECTRICAL CONNECTORS

The solenoid valves are supplied without connectors. Connectors for electrical connections K1 and WK1 (EN 175301-803, ex DIN 43650) can be ordered separately. See catalogue 49 000.

9 - INSTALLATION

The stacked valve assembly can be installed in any position without impair the proper functioning.

9.1 - Fixing and tie-rods

Please contact the technical dept. for dimensional check of special assemblies before order.

Tightening torque: 20 (0/+3) Nm

Valve type	Valve qty.	**KIT code**
BDL2 BDM2	3	3404100100
	4	3404100101
	5	3404100102
	6	3404100103
	7	3404100104
	8	3404100105
	9	3404100106
BDL3 BDM3 BDS3	3	3404100108
	4	3404100109
	5	3404100110
	6	3404100111

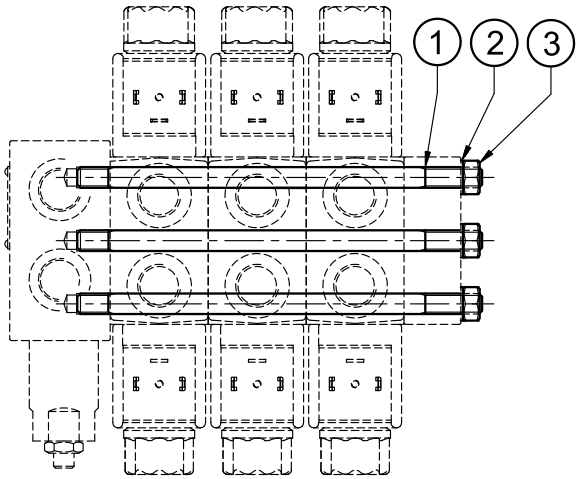

1	galvanized trapped screw
2	galvanized nut
3	galvanized safety washer

10 - OVERALL AND MOUNTING DIMENSIONS OF DIRECTIONAL VALVES

10.1 - BD* - mounting surfaces

dimensions in mm

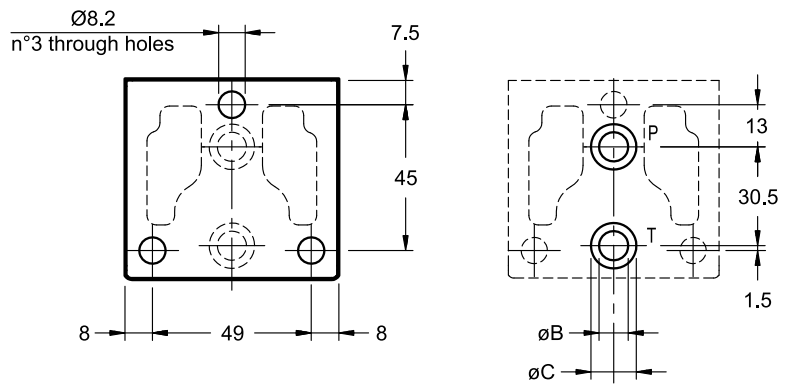

NOTE: the variant is available adding **A** after ports size in the identification code.
Example: BDL3-B38**A**-S1/10

	ØB	ØC	Seals
standard	9	14	2 OR type 2043 (10.82x1.78)
A variant	7.5	12	2 OR type 2037 (9.25x1.78)

10.2 - BD* directional valve element - bodies

dimensions in mm

picture A - BD*3
with mounting surface
for flangeable element
available ports:
B38 or **S06**

picture B - BD*3
available ports:
B12 or **S08**

picture C - BD*2
available ports:
B38 or **S06**

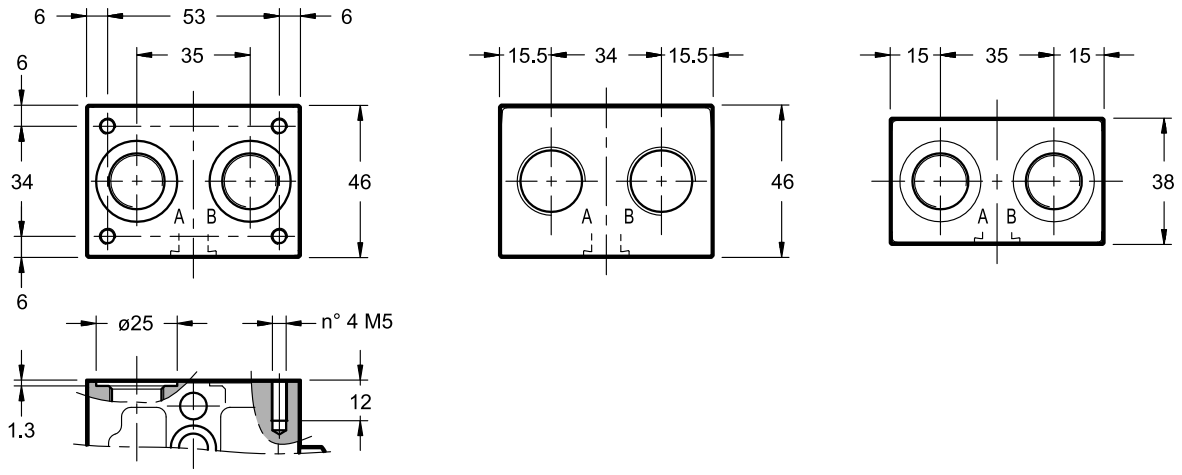

10.3 - BDL - Directional valve element - solenoid tube ø14

dimensions in mm

BDL2 - B38

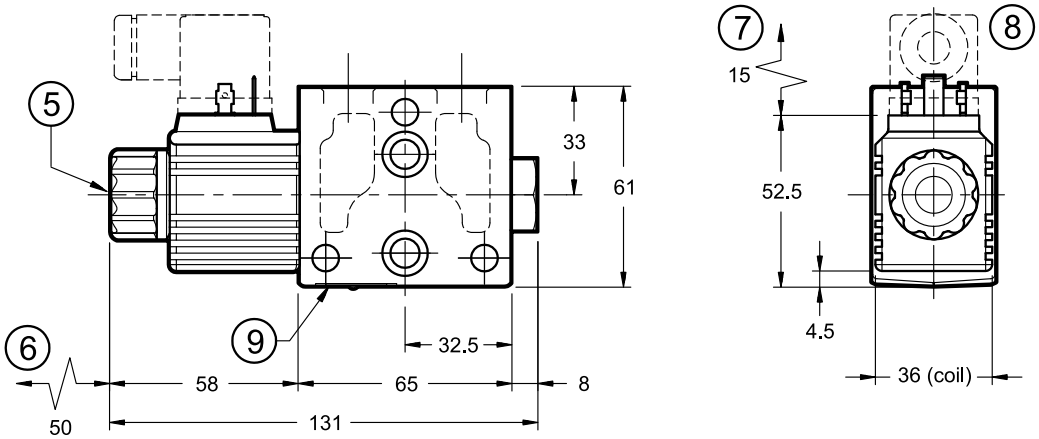

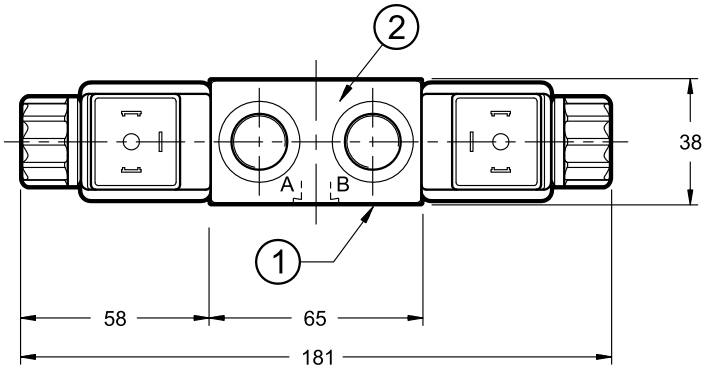

BDL3 - B38

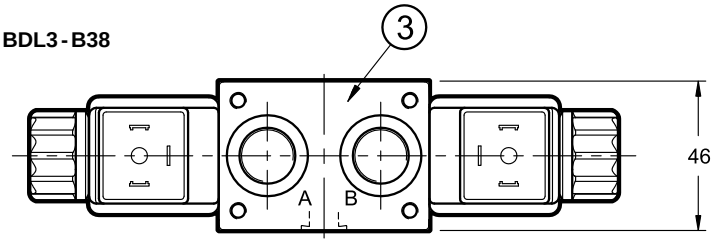

BDL3 - B12

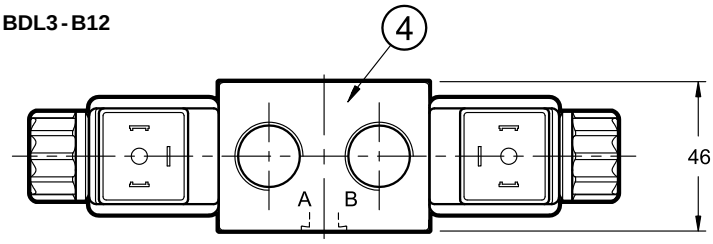

1	Mounting surface with sealing rings
2	A and B ports: 3/8” BSP
3	A and B ports: 3/8” BSP with mounting interface for flangeable elements
4	A and B ports: 1/2” BSP
5	Locking ring with embedded boot manual override. ring tightening torque: 3 Nm
6	Coil removal space
7	EN 175301-803 (ex DIN 43650) connector removal space
8	EN 175301-803 (ex DIN 43650) connector for K1 coil connection To be ordered separately.
9	Element label

10.4 - BDM - Directional valve element - solenoid tube ø19

dimensions in mm

BDM2-B38

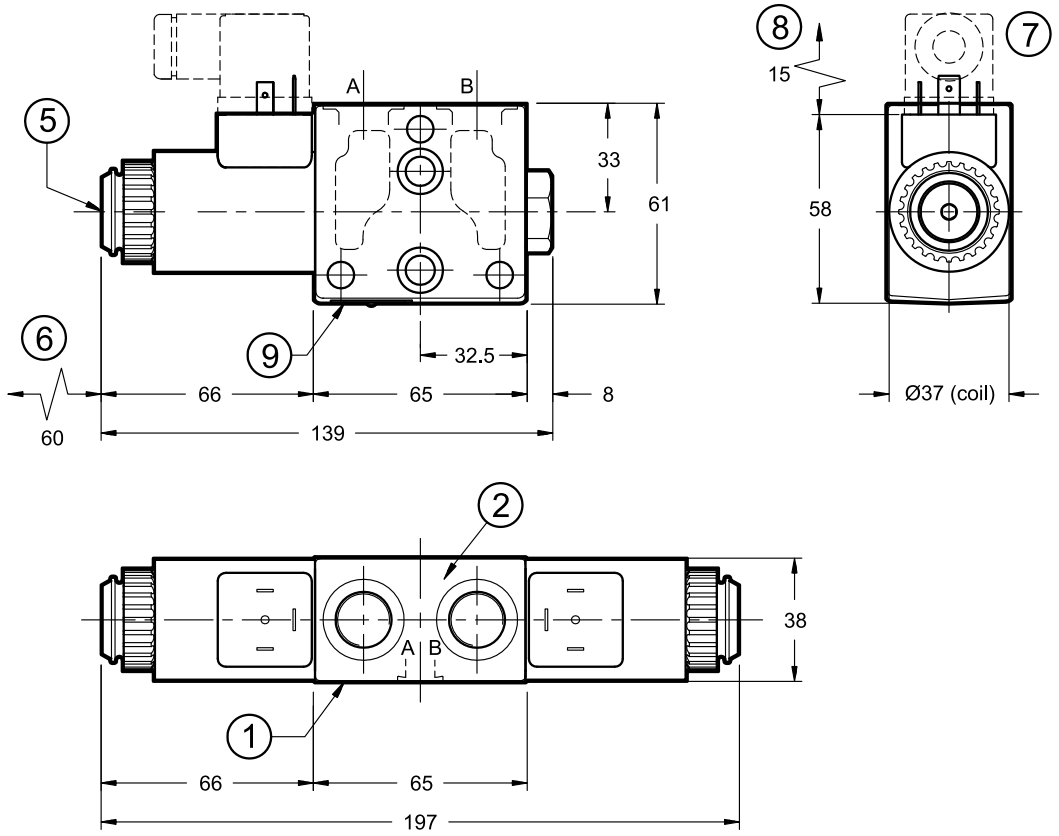

BDM3-B38

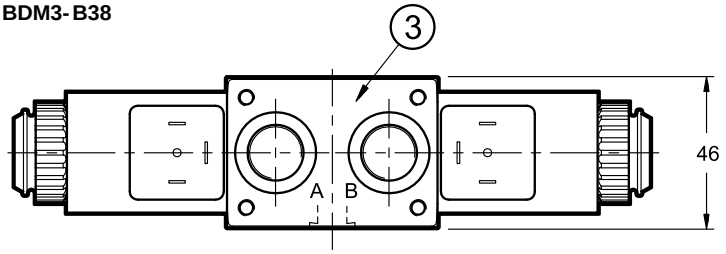

BDM3-B12

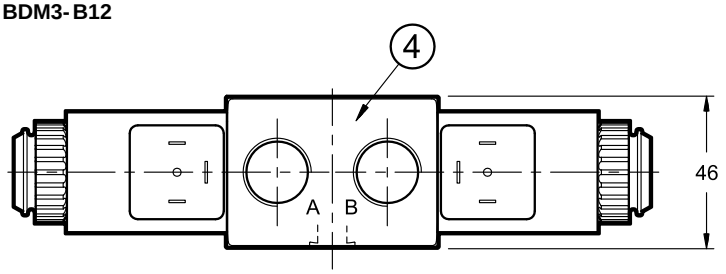

1	Mounting surface with sealing rings
2	A and B ports: 3/8” BSP
3	A and B ports: 3/8” BSP with mounting interface for flangeable elements
4	A and B ports: 1/2” BSP
5	Locking ring with manual override (pin) embedded in the tube. Ring tightening torque: 5 Nm
6	Coil removal space
7	EN 175301-803 (ex DIN 43650) connector removal space
8	EN 175301-803 (ex DIN 43650) connector for K1 coil connection To be ordered separately.
9	Element label

10.5 - BDS - Directional valve element - solenoid tube ø22

dimensions in mm

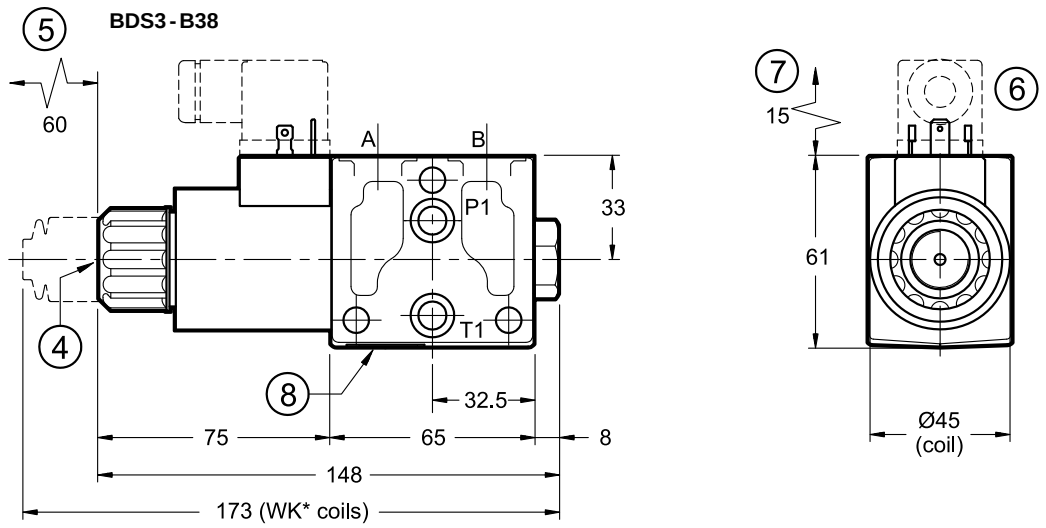

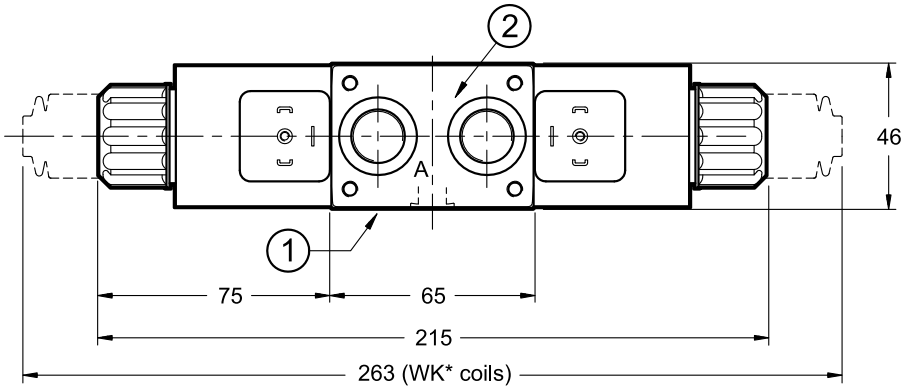

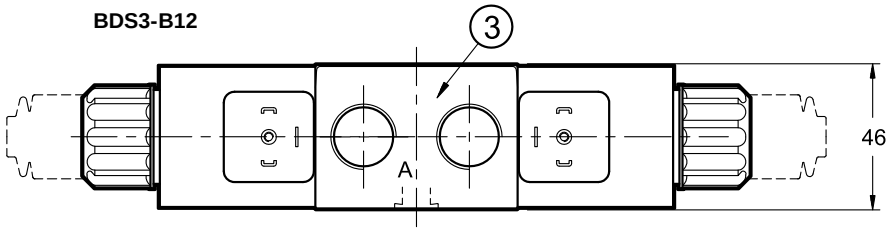

1	Mounting surface with sealing rings
2	A and B ports: 3/8” BSP with mounting interface for flangeable elements
3	A and B ports: 1/2” BSP
4	Locking ring with manual override (pin) embedded in the tube. Ring tightening torque: 5 Nm
5	Coil removal space
6	EN 175301-803 (ex DIN 43650) connector removal space
7	EN 175301-803 (ex DIN 43650) connector for K1 coil connection To be ordered separately.
8	Element label

10.6 - CM - boot protected

The BDL standard element is already equipped with boot protection of the solenoid tube. For both BDM and BDL elements add **/CM** at the end of the code.

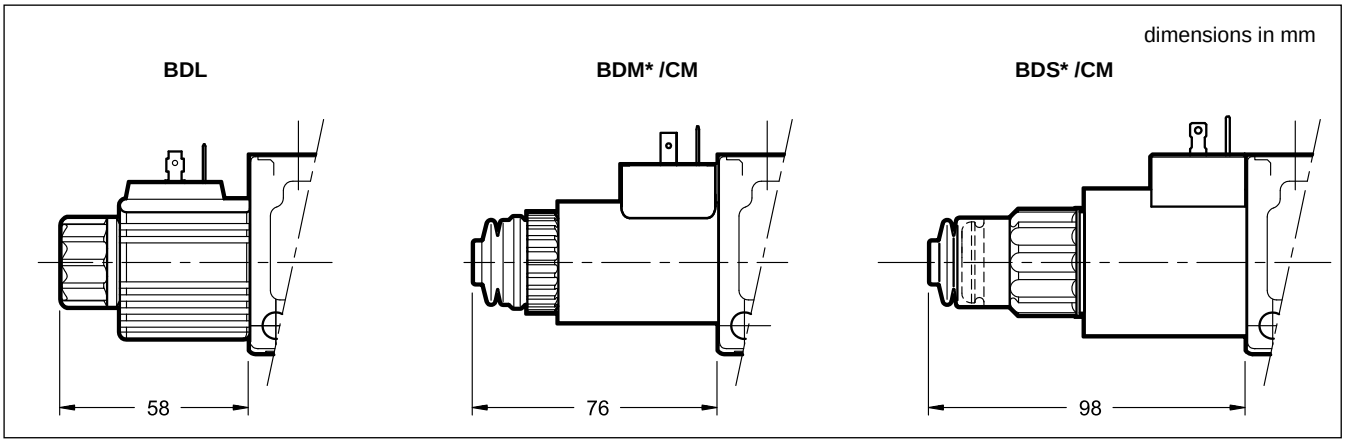

10.7 - CK1 - knob manual override, turning

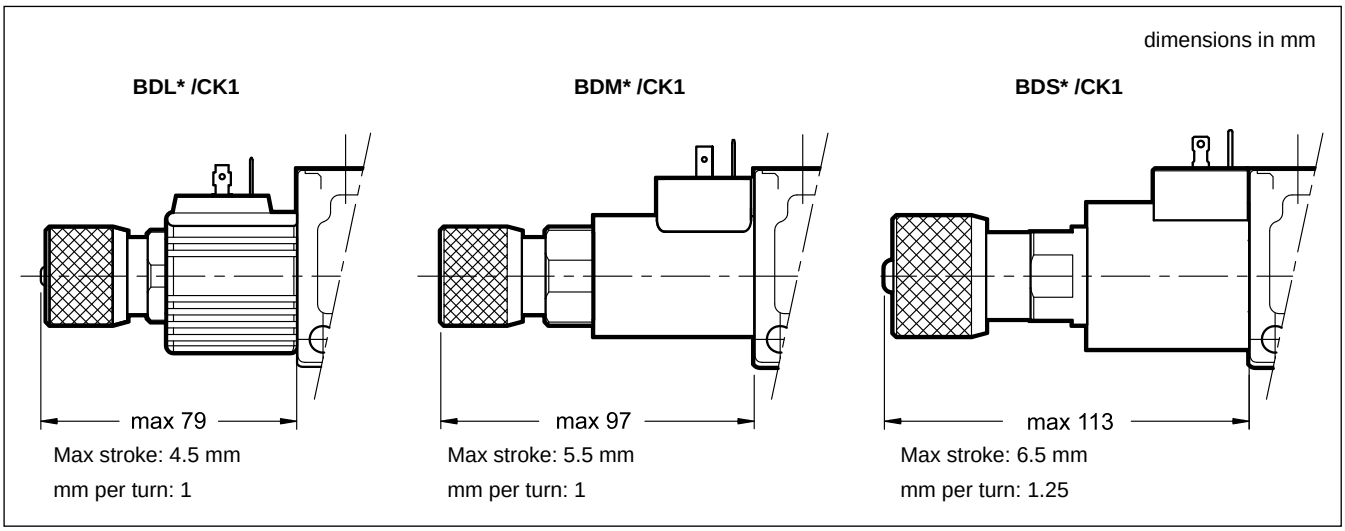

10.8 - CHL light duty lever manual override

Devices are placed on side A. Please contact our technical depth for other positions. For non-quoted dimensions, please refer to the overall tables in previous pages.

The CHL lever device can work with a maximum pressure in line T up to 50 bar, therefore it is not suitable for series circuits.

dimensions in mm

BDL2-* /CHL

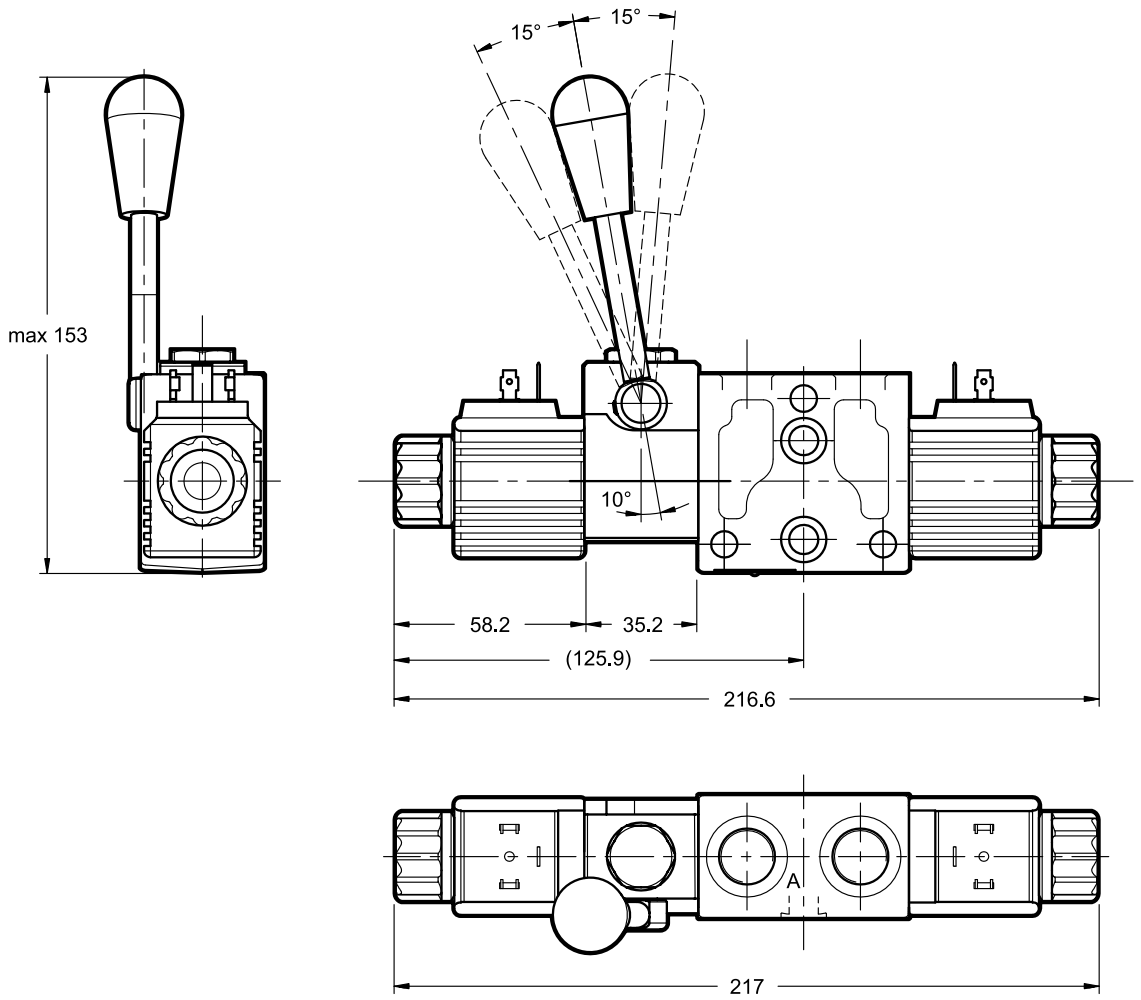

BDM3-* /CHL

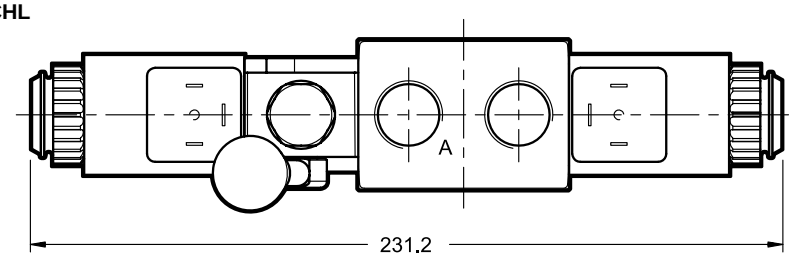

BDS3-* /CHL

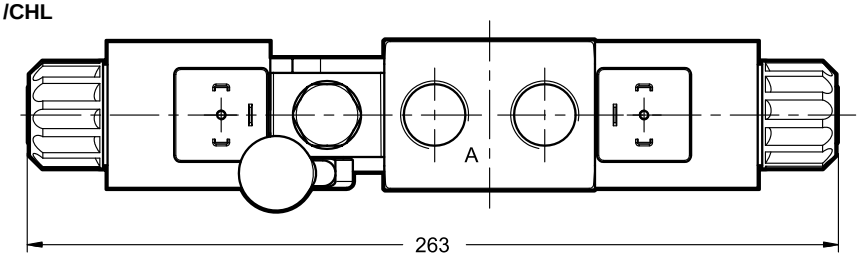

11 - DIMENSIONS OF INLET AND OUTLET ELEMENTS FOR PARALLEL CIRCUITS

11.1 - Inlet elements

BD3-B12S-P
without pressure relief valve

dimensions in mm

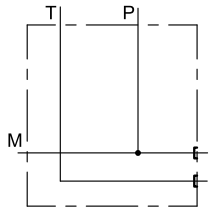

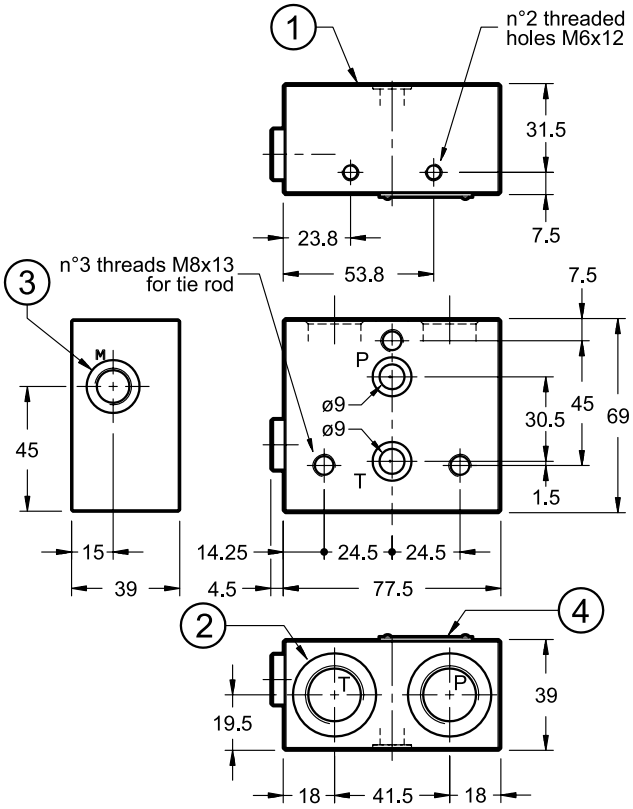

1	Mounting surface with sealing rings: 2 OR type 2043 (10.82x1.78)
2	P and T ports: 1/2” BSP
3	Pressure gauge port: 1/4” BSP
4	Element label

BD3-B12S-P***
with pressure relief valve

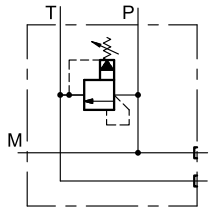

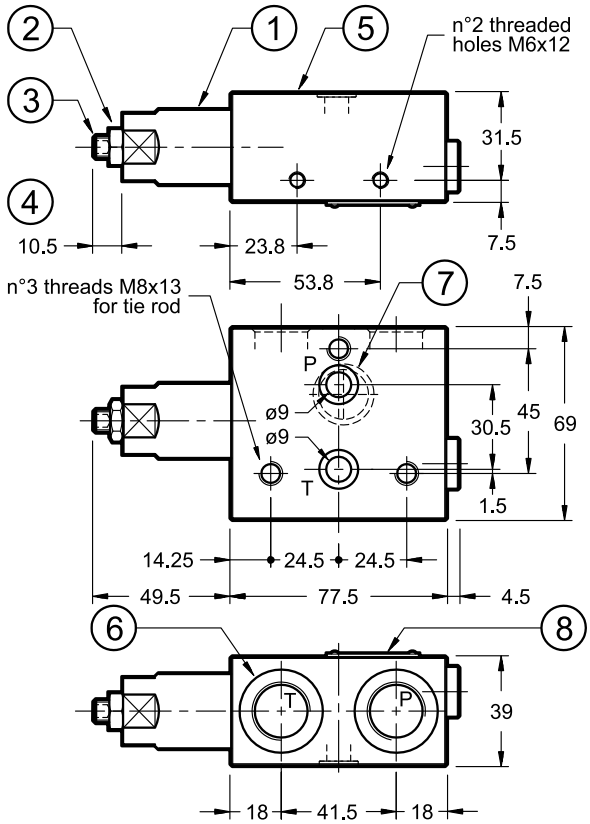

1	Pressure relief valve
2	Locking nut: spanner 13
3	Socket hex adjustment screw: Allen key 4 Clockwise rotation to increase pressure
4	Maximum screw stroke
5	Mounting surface with sealing rings: 2 OR type 2043 (10.82x1.78)
6	P and T ports: 1/2” BSP
7	Pressure gauge port:1/4” BSP
8	Element label

BD3-B12S-PK***
with pressure relief valve and unloading valve

dimensions in mm

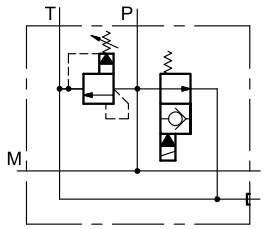

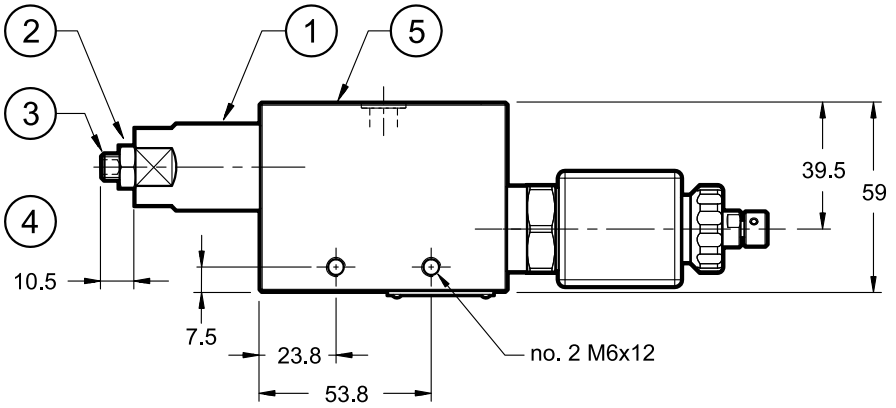

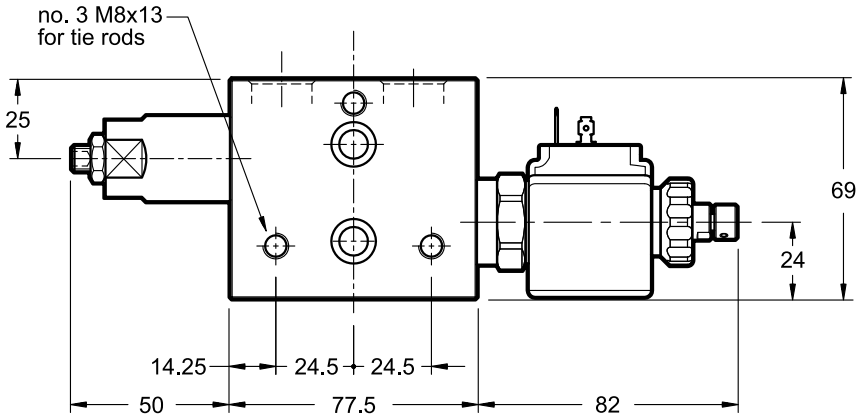

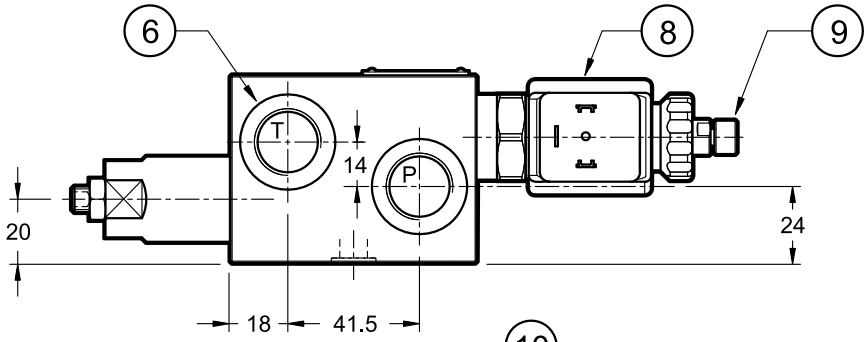

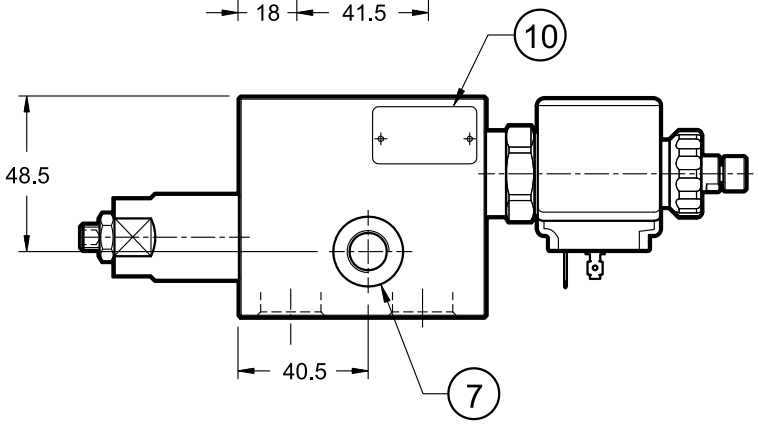

1	Pressure relief valve
2	Locking nut: spanner 13
3	Socket hex adjustment screw: Allen key 4 Clockwise rotation to increase pressure
4	Maximum stroke
5	Mounting surface with sealing rings: 2 OR type 2043 (10.82x1.78)
6	P and T ports: 1/2” BSP
7	Pressure gauge port:1/4” BSP
8	Unloading valve Here shown with K1 connection
9	CP type manual override. See identification codes for further choices.
10	Element label

NOTE: for missing dimensions of mounting interface please refer to par. 10.1 ’mounting surfaces’.

11.2 - Inlet elements for flow control valve

BD3-B38S-PK*-Q**
with pressure relief valve and unloading valve

dimensions in mm

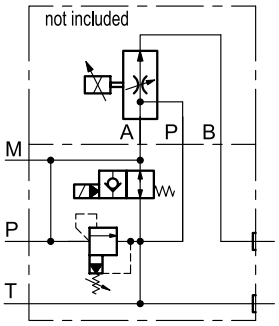

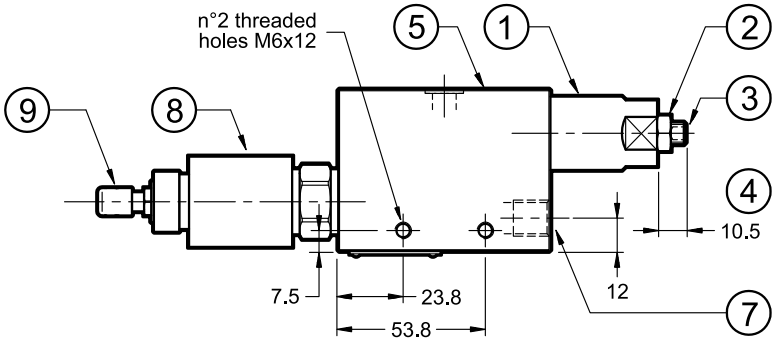

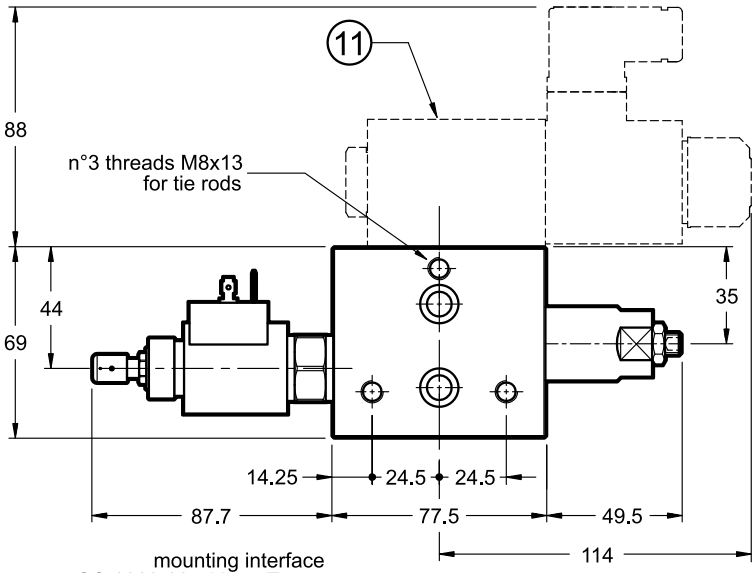

NOTE :The same component without part no. 8 is:
BD3-B38S-P*-Q**
with pressure relief valve
without unloading valve

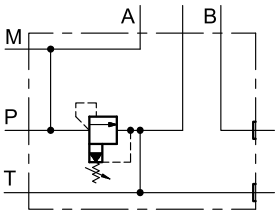

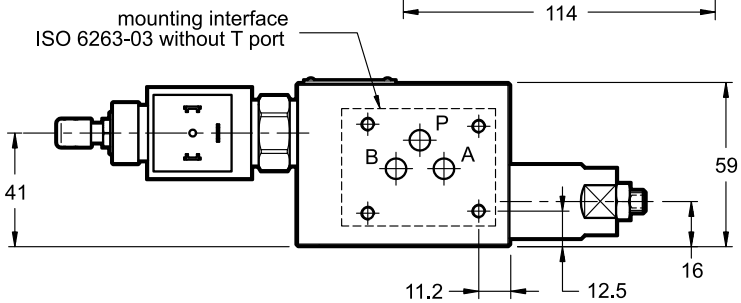

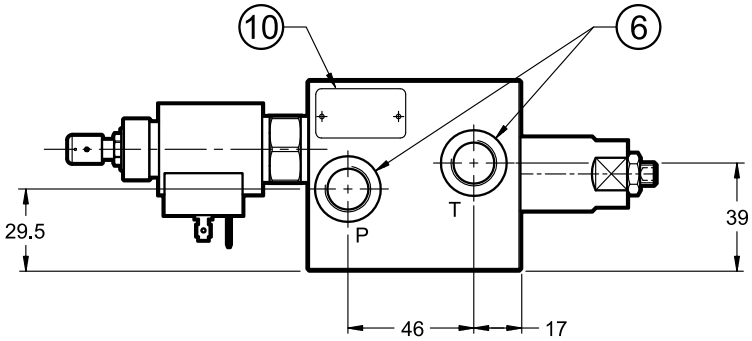

1	Pressure relief valve
2	Locking nut: spanner 13
3	Socket hex adjustment screw: Allen key 4 Clockwise rotation to increase pressure
4	Maximum stroke
5	Mounting surface with sealing rings: 2 OR type 2043 (10.82x1.78)
6	P and T ports: 3/8” BSP
7	Pressure gauge port: 1/4” BSP
8	Unloading valve Here shown with K1 connection
9	Push and twist manual override: see identification codes for further choices.
10	Element label
11	Encumbrance of flow control valve. To be ordered separately. See catalogue 82 220

NOTE: for missing dimensions of mounting interface please refer to par. 10.1 ’mounting surfaces’.

11.3 - Outlet elements

BD3-S-R00
blind plate
Code **0194019**

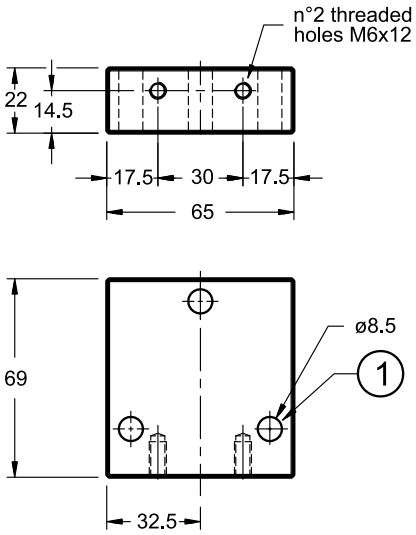

dimensions in mm

NOTE: for missing dimensions of mounting interface please refer to par. 10.1 'mounting surfaces'.

1	n° 3 through holes for stack assembly tie-rods

BD3-B38S-R01
plate with P1 outlet
Code **0194062**

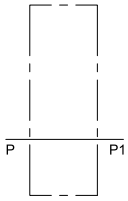

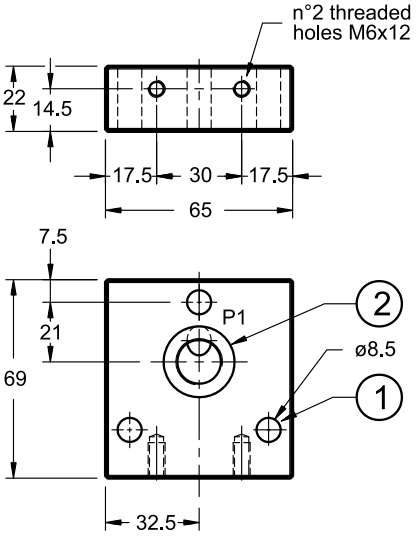

1	n° 3 through holes for stack assembly tie-rods
2	P1 port: 3/8 BSP

BD3-B38S-R02
plate with T1 outlet
Code **0194055**

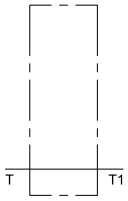

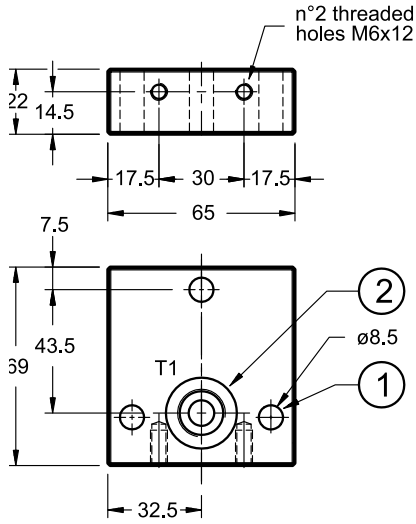

1	n° 3 through holes for stack assembly tie-rods
2	T1 port: 3/8 BSP

BD3-B38S-R03
plate with P1 and T1 outlet
Code **0194063**

dimensions in mm

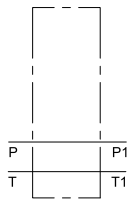

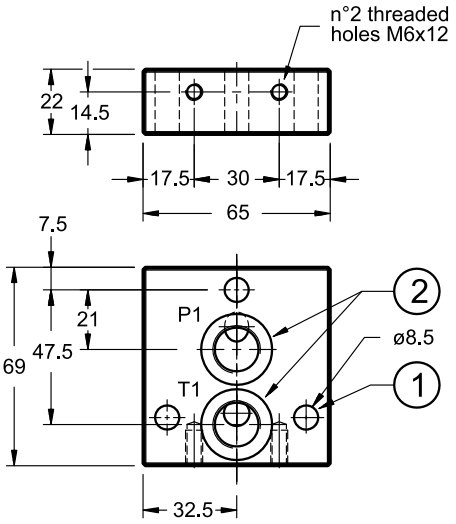

1	n° 3 through holes for stack assembly tie-rods
2	P1 and T1 ports: 3/8" BSP

NOTE: for missing dimensions of mounting interface please refer to par. 10.1 'mounting surfaces'.

12 - IDENTIFICATION CODE FOR STACKED VALVE ASSEMBLY

BD | | | **-** | | | **/** | **10** | | **-** | | | **/** | **XXXXX**

Stacked valve assembly

Solenoid tube (mm):
L = 14
M = 19
S = 22 (only size 3)

Size:
2 = thickness 38 mm
3 = thickness 46 mm

Circuit type:
P = parallel
S = series (parallel elements with plugs)
C = series (series elements)
Available for size 2 only

No. of directional valves

Series no.:
(the overall and mounting dimensions remain unchanged from 10 to 19)

Seals:
N = NBR seals for mineral oil (**standard**)
V = FPM seals for special fluids

Coil type:
DC coils
D12 = 12 V
D24 = 24 V
D28 = 28 V
D00 = valve without coil supplied with locking ring

Coil electrical connection:
K1 = plug for connector type EN 175301-803 (ex DIN 43650) (**standard**)
K7 = plug DEUTSCH DT04-2P for male connector type DEUTSCH DT06-2S

Configuration code (5 digits), assigned by Duplomatic

13 - CONNECTION SCHEMES EXAMPLES

13.1 - BD**-P parallel connection

Parallel circuit is obtained with elements for parallel connection (see point 1).

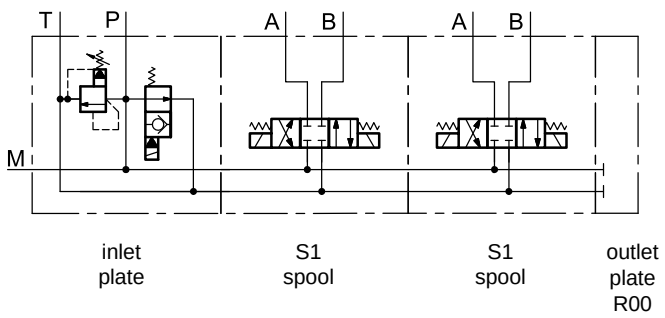

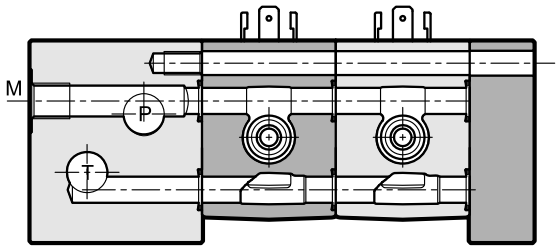

13.2 - BD**-S series connection

Series circuit is obtained by inserting plugs in elements for parallel connection (see point 1).

Please note that this kind of configuration requires a different outlet plate, depending on the number (even or odd) of directional valves in the assembly.

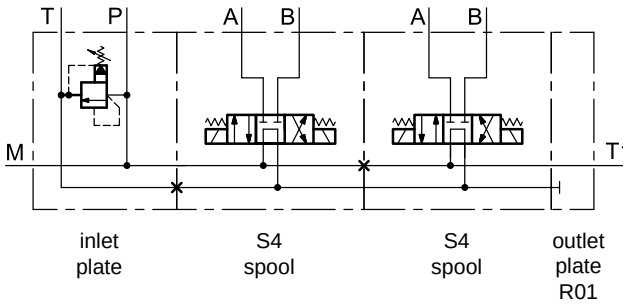

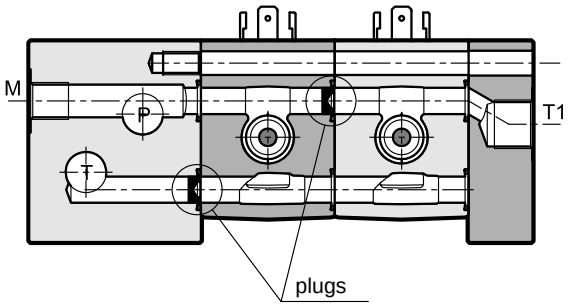

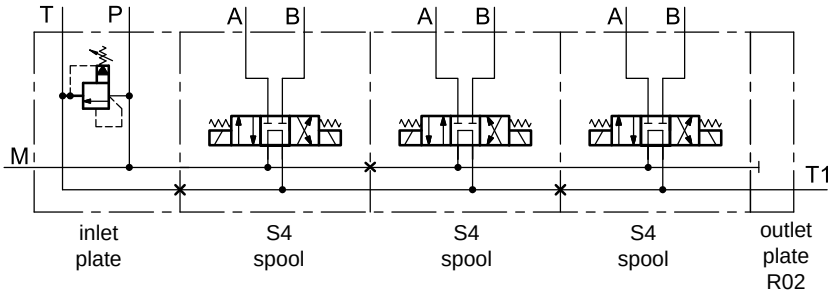

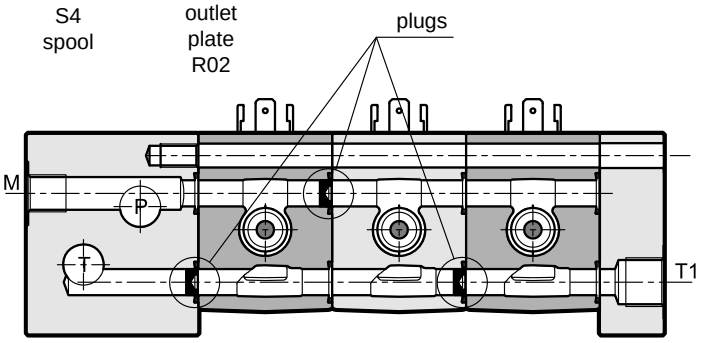

plug Ø9 - ordering code: **0612253**

13.3 - BDL2-C and BDM2-C series connection

BD*2-C series connection is obtained with elements designed for series (see point 14). The series elements are available in size 2 only.

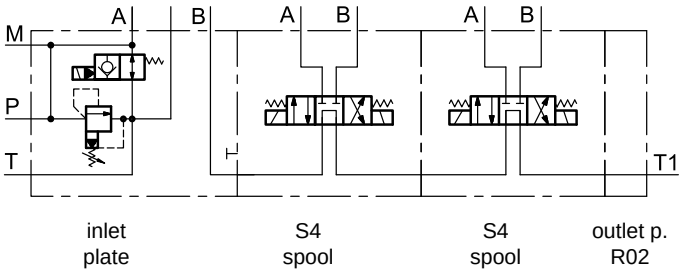

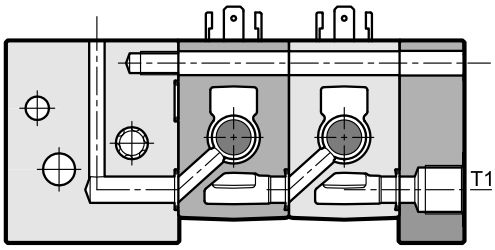

14 - IDENTIFICATION CODES OF SEPARATE ELEMENTS FOR BDL2 AND BDM2 SERIES CIRCUITS

14.1 - Directional valve element

This code identifies BD*2 elements, designed for series connection. Series circuits with BD*3 modules are feasible by inserting plugs to divert the oil path (see point 13.2).

BD 2 - C - S4 / 10 - /

Stack directional valve element, on-off

Solenoid tube (mm):
L = 14
M = 19

Size = thickness 38 mm

Ports:
B38 = 3/8” BSP
S06 = 9/16” 18 UNF (SAE 06)

Series design
with sloped hole for T1 path.

Spool type

Series no.
(the overall and mounting dimensions remain unchanged from 10 to 19)

Seals:
N = NBR seals for mineral oil (**standard**)
V = FPM seals for special fluids

Coil type (see point 1.1)

Coil electrical connection: (see point 1.1)

Manual override (see point 10.6 - 10.8):
for **BDL**:
omit for manual override boot protected integrated in the coil locking ring (**standard**)
CK1 = turning knob override
for **BDM:**
omit for pin manual override integrated in the tube (**standard**).
CM = manual override boot protected
CK1 = turning knob override

14.2 - Inlet elements for flow control valve

BD 3 - B38 S - S - Q / 10 - /

Stackable

Nominal size

Ports size:
3/8” BSP (**standard**)

Material:
S = Steel (**standard**)

Series inlet element with pressure relief valve

K = with unloading valve. Omit if not required.

Pressure relief valve adj. range:
140 = up to 140 bar
210 = up to 210 bar
320 = up to 320 bar

Mounting interface ISO 6263-03 style for flow control valve
(to be ordered separately, see catalogue 82220).

Series no.:
(the overall and mounting dimensions remain unchanged from 10 to 19)

Seals:
N = NBR seals for mineral oil (**standard**)
V = FPM seals for special fluids

Manual override of unloading valve:
CP = push
CPK= push and twist

Coil electrical connection of the unloading valve:
K1 = plug for connector type EN 175301-803 (ex DIN 43650) (**standard**)
For **D12** and **D24** coils only:
K7 = plug DEUTSCH DT04-2P for male connector type DEUTSCH DT06-2S
K2 plug for connector type AMP JUNIOR upon request.

Coil type of the unloading valve:
DC coil
D12 = 12 V
D24 = 24 V

NOTE: if no unloading valve is needed, the identification code ends with seals digit.
Example: BD3-B38S-S140-Q/10N

14.3 - Outlet elements

Please choose the proper outlet element amongst those in point 1.7. Overall dimensions are at point 11.3.

15 - CHARACTERISTIC CURVES AND OPERATING LIMITS FOR SERIES

Please refer to diagrams at point 3 for pressure drops, whereas operating limits are here below.

15.1 - BDL2-B38C-S4

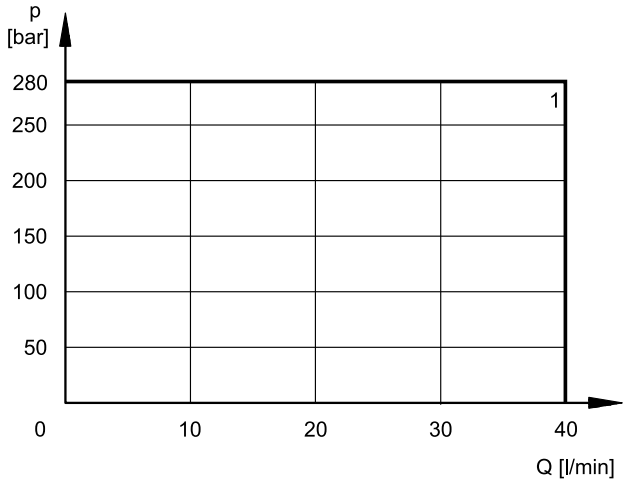

15.2 - BDM2-B38C-S4

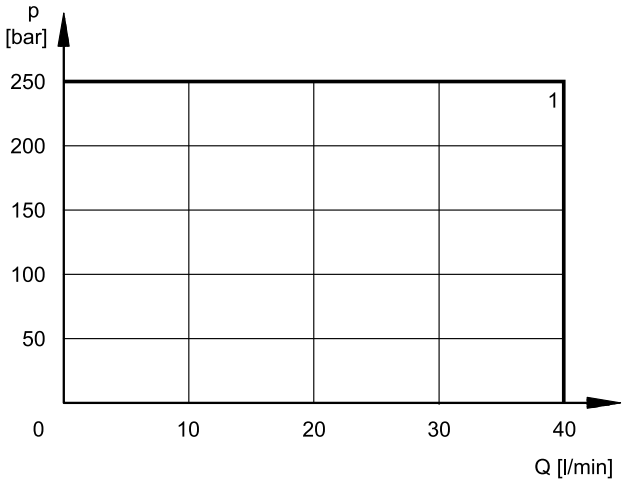

16 - DIMENSIONS OF ELEMENTS FOR SERIES CONNECTION

16.1 - BD*2-B38C-S4/10* - directional valve element

The BDM2 configuration is showed here. The same directional valve is available as BDL2. For non-quoted dimensions, please refer to the drawings for parallel circuits. Overall dimensions are the same.

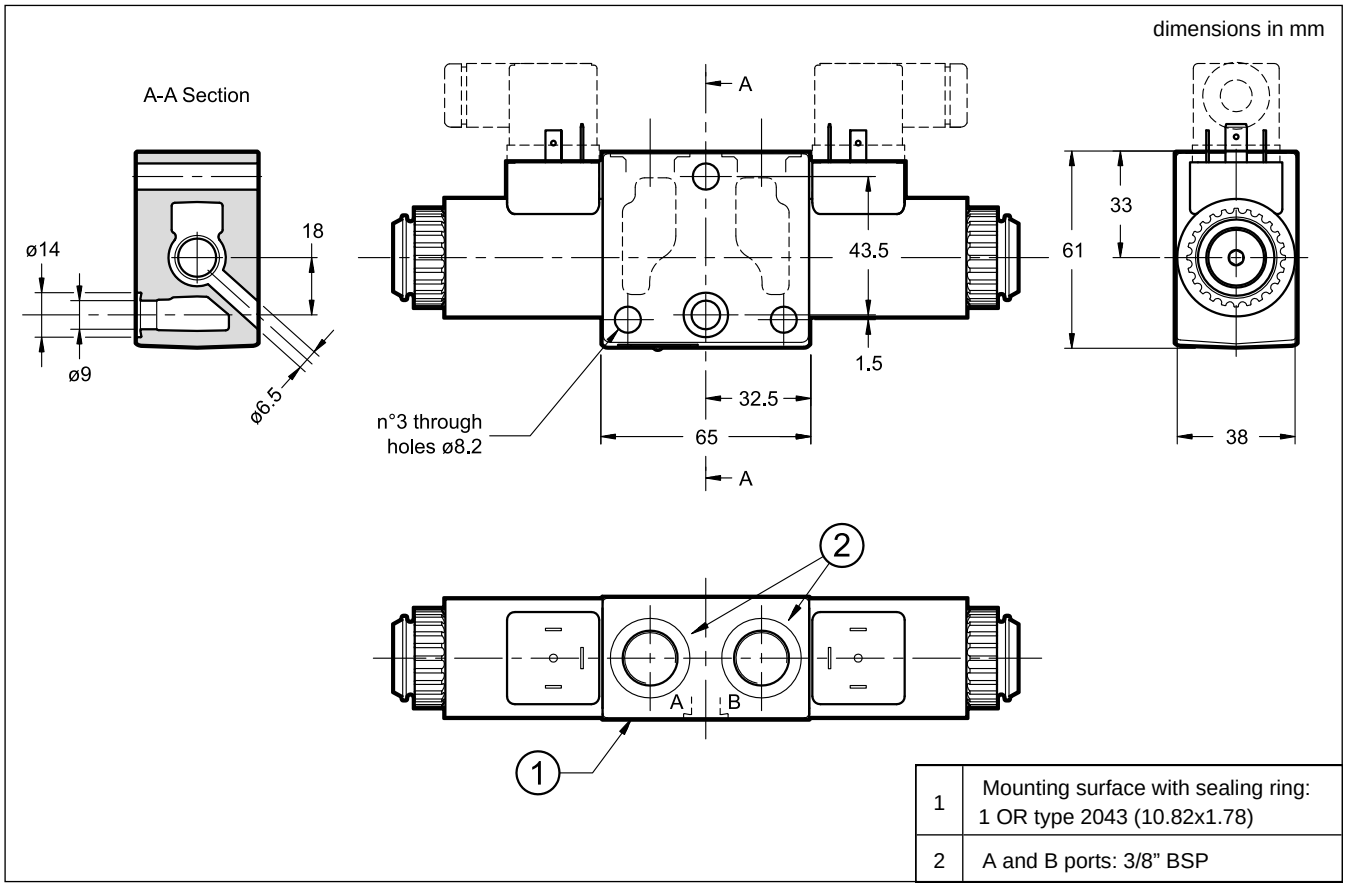

16.2 - Inlet elements for flow control valve

BD3-B38S-SK*-Q**
with pressure relief valve and unloading valves

dimensions in mm

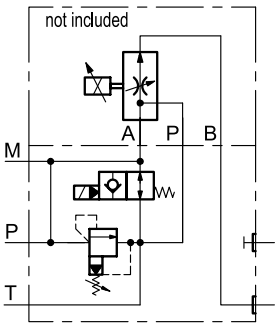

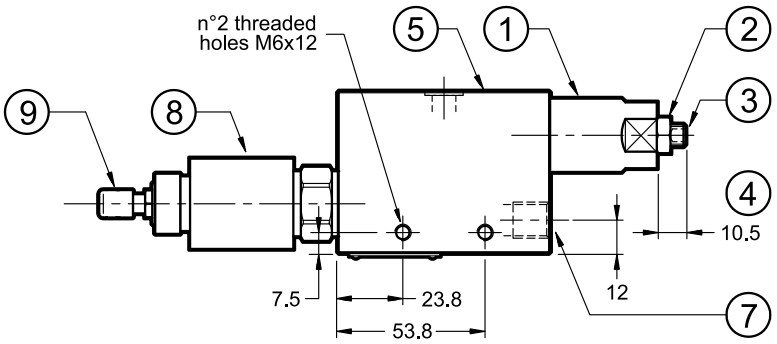

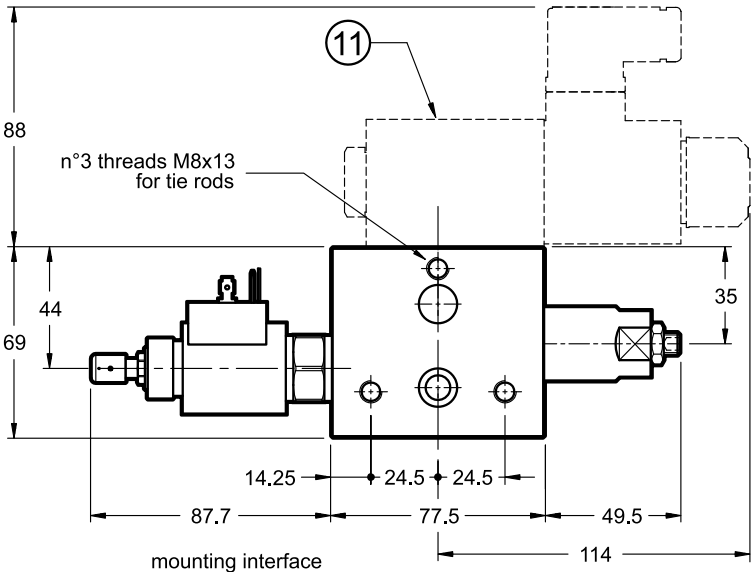

NOTE :The same component without part no. 8 is:
BD3-B38S-S*-Q**
with pressure relief valve
without unloading valve

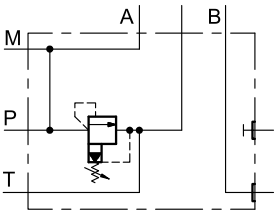

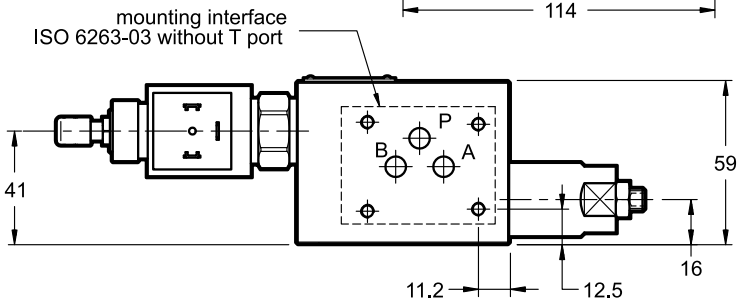

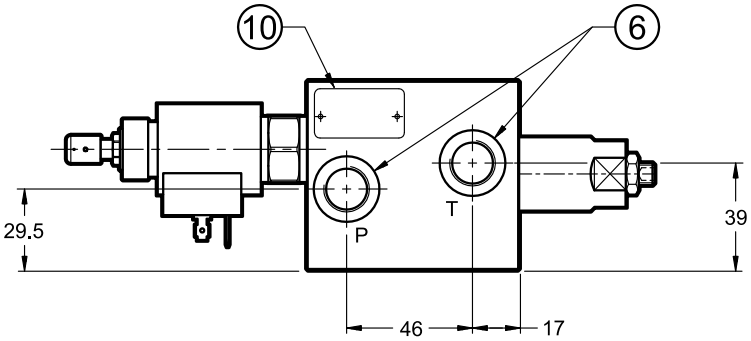

1	Pressure relief valve
2	Locking nut: spanner 13
3	Socket hex adjustment screw: Allen key 4 Clockwise rotation to increase pressure
4	Maximum screw stroke
5	Mounting surface with sealing rings: 2 OR type 2043 (10.82x1.78)
6	P and T ports: 3/8” BSP
7	Pressure gauge port:1/4” BSP
8	Unloading valve Here shown with K1 connection
9	CPK manual override: see identification codes for further choices.
10	Element label
11	Overall dimensions of the flow control valve. To be ordered separately. See catalogue 82 220

NOTE: for missing dimensions of mounting interface please refer to the point 10.1 ’mounting surfaces’.

DUPLOMATIC MOTION SOLUTIONS
a member of DAIKIN group

DUPLOMATIC MS Spa
via Mario Re Depaolini, 24 | 20015 Parabiago (MI) | Italy
T +39 0331 895111 | E vendite.ita@duplomatic.com | sales.exp@duplomatic.com
duplomaticmotionsolutions.com